No. PE-4JG2E

TCM®

PARTS MANUAL

DIESEL ENGINE

4JG2PJ
4JG2PJ-01
4JG2PJ-02
4JG2PJ-03
4JG2PJ-04
4JG2PJ-05
4JG2PJ-07
4JG2PJ-08
4JG2PJ-09

ISUZU

TCM CORPORATION

M-16 CONTENTS

SECTION	LOC.No.
ご使用のまえに(1/2)	B-1
ご使用のまえに(2/2)	B-2
INTRODUCTION(1/2)	B-3
INTRODUCTION(2/2)	B-4
APPLICABLE MODEL	B-5
ENGINE BODY	
CYLINDER BLOCK	C-2
PISTON,CRANKSHAFT & FLYWHEEL	C-5
TIMING GEAR CASE	C-8
OIL PAN	C-11
FLYWHEEL HOUSING	C-13
HEAD & VALVE MECHANISM	
CYLINDER HEAD & COVER	D-2
VALVE MECHANISM	D-5
INLET & EXHAUST	
AIR INTAKE & EXHAUST SYSTEM	E-2
LUBRICATION	
OIL PUMP	F-2
OIL FILTER	F-3
OIL PIPE	F-5
COOLING	
COOLING SYSTEM	G-2
FUEL	
FUEL SYSTEM	H-2
INJECTION NOZZLE	H-4
INJECTION PUMP(FITTING PARTS)	H-6
INJECTION PUMP(INNER PARTS)(1/2)	H-8
INJECTION PUMP(INNER PARTS)(2/2)	H-13
FUEL FILTER	I-5
ELECTRICAL	
STARTER,GENERATOR & ELECTRICAL PARTS	J-2
STARTER(INNER PARTS)	J-4
GENERATOR(INNER PARTS:-129128)	J-6
GENERATOR(INNER PARTS:129129-)	J-8
PARTS NUMBER INDEX	M-2

B-1 ご使用のまえに（1／2）

このパーツマニアルは，TCM フォークリフトのエンジンの構成部品を収録しています。

部品ご注文について

部品ご注文の際は，必ず車両の形式・製造番号（号車），エンジンの形式・製造番号（号機），部品番号および注文数を明示してください。車両の製造番号（号車）は車両銘板に，エンジンの製造番号（号機）は，シリンダブロックに打刻で表示しています。

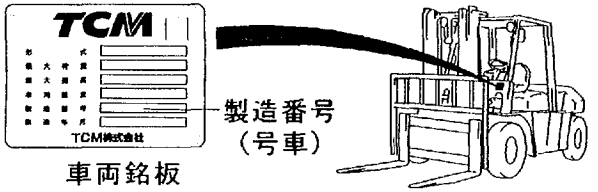

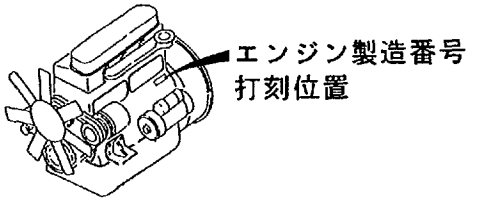

ご使用について

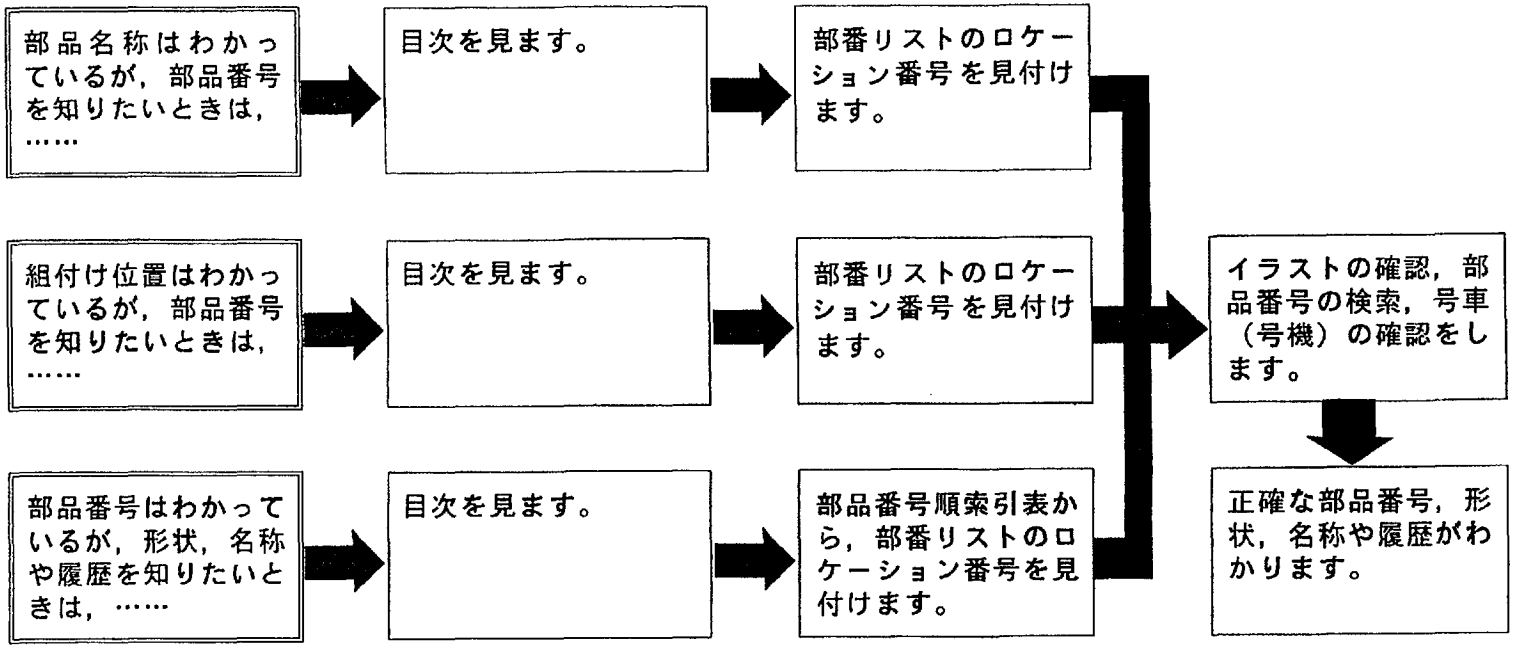

B-2 ご使用のまえに（2／2）

略語および記号

ＡＳＳＹ	組立品を示します。
＊	セットおよびキットの販売部品を示します。
ＡＲ	必要に応じた数を使用します。
t	厚みを示します。
L	長さを示します。
OD	外径を示します。
ＩＤ	内径を示します。
＋	図示していません。
ＧＲＤ	シリンダボディとライナの締め代グレードおよびライナとピストンのすき間グレードを示します。 部品注文に必要なグレード確認はE/Gメーカ発行の修理解説書を参照してください。
(GE)	大容量ジェネレータ仕様を示します。
(EPA)	排ガス規制対応仕様を示します。

部品は，品質向上のため予告なく変更することがありますので，あらかじめご了承ください。

B-3 INTRODUCTION (1/2)

This Parts Manual contains the component parts of the engine mounted on **TCM FORKLIFT TRUCK**.

How to order parts

When ordering, be sure to specify the model name and serial number (machine number), engine type and serial number (engine number) of your machine, as well as the part number and desired quantity for each part. The machine serial number (machine number) is indicated on the machine name plate, and the engine serial number (engine number) is punched on the cylinder block.

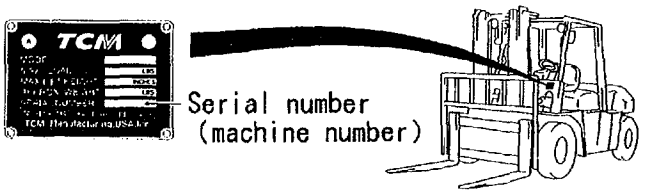

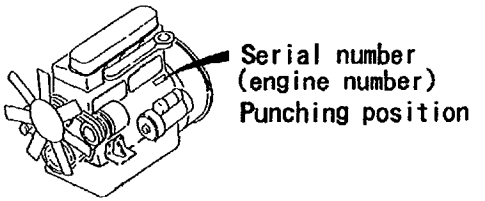

How to use the Parts Manual

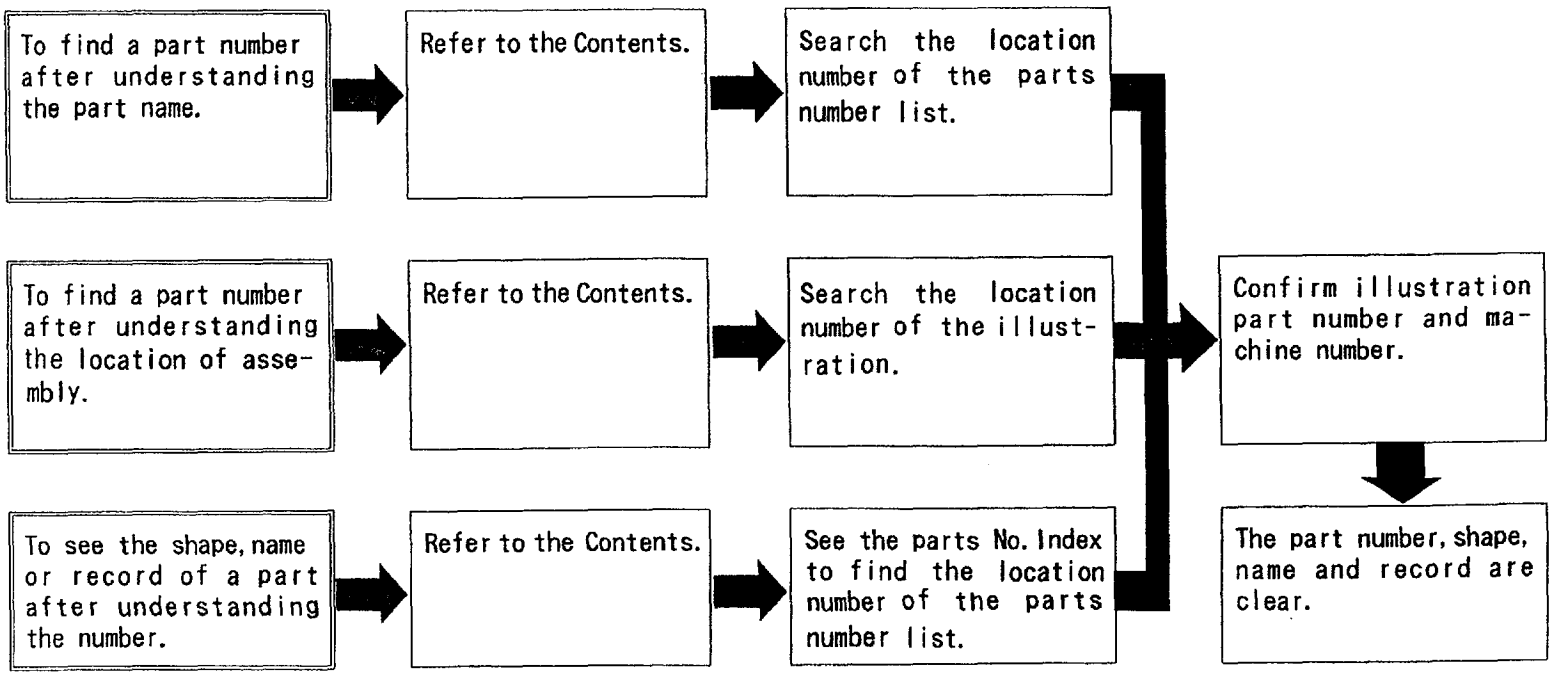

B-4 INTRODUCTION (2/2)

Abbreviations and symbols

ASSY ···· Assembled unit.

* ····· The marketable part set or kit.

AR ····· Quantity required.

t ····· Thickness.

L ····· Length.

OD ····· Outside diameter.

ID ····· Inside diameter.

+ ····· Not illustrated.

GRD ····· The grade of the tightening allowance between a cylinder body and a liner and the grade of the clearance between a liner and a piston are shown.
If necessary to confirm the grade for each part when placing orders of parts, to the WORKSHOP MANUAL issued by the engine manufacturer.

(GE) ····· The specifications of the large-capacity generator are shown.

(EPA) ···· The specifications of the conforming to the EPA exhaust gas regulation.

Materials and specifications subject to change without notice.

B-5 APPILICABLE MODEL

TYPE	ENGINE TYPE	APPLICABLE MODEL		
A	4JG2PJ	FHD20Z2(C) FHD20Z5(C)	FHD25Z2(C) FHD25Z5(C)	FHD30Z2(C) FHD30Z5(C)
B	4JG2PJ-01	FHD20Z2(OC) FHD20Z5(OC)	FHD25Z2(OC) FHD25Z5(OC)	FHD30Z2(OC) FHD30Z5(OC)
C	4JG2PJ-02	FHD35Z9	FHD36Z9	FHD36Z2
D	4JG2PJ-03	FHD20Z2(EXA) FHD20Z5(EXA)	FHD25Z2(EXA) FHD25Z5(EXA)	FHD30Z2(EXA) FHD30Z5(EXA)
E	4JG2PJ-04	FHD20Z2(C/HCS) FHD20Z5(C/HCS)	FHD25Z2(C/HCS) FHD25Z5(C/HCS)	FHD30Z2(C/HCS) FHD30Z5(C/HCS)
F	4JG2PJ-05	FHD20Z2(OC/HCS) FHD20Z5(OC/HCS)	FHD25Z2(OC/HCS) FHD25Z5(OC/HCS)	FHD30Z2(OC/HCS) FHD30Z5(OC/HCS)
G	4JG2PJ-07	FHD20Z2(T) FHD20Z5(T)	FHD25Z2(T) FHD25Z5(T)	FHD30Z2(T) FHD30Z5(T)
H	4JG2PJ-08	FHD20Z2(C/EXE) FHD20Z5(C/EXE)	FHD25Z2(C/EXE) FHD25Z5(C/EXE)	FHD30Z2(C/EXE) FHD30Z5(C/EXE)
J	4JG2PJ-09	FHD20Z2(T/EXE) FHD20Z5(T/EXE)	FHD25Z2(T/EXE) FHD25Z5(T/EXE)	FHD30Z2(T/EXE) FHD30Z5(T/EXE)

C-2 CYLINDER BLOCK

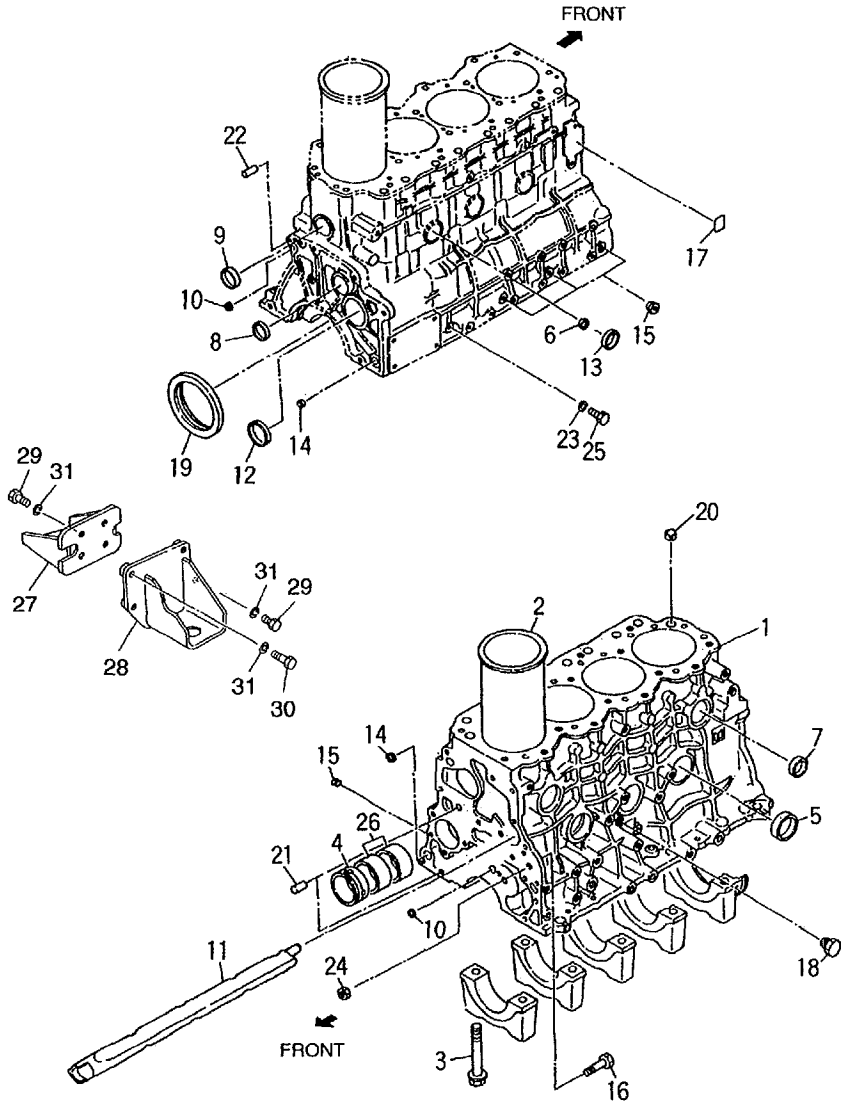

A :4JG2PJ
B :4JG2PJ-01
C :4JG2PJ-02
D :4JG2PJ-03
E :4JG2PJ-04
F :4JG2PJ-05
G :4JG2PJ-07
H :4JG2PJ-08
J :4JG2PJ-09

No.	Part No.	Description	Req'd	Remarks・Serial No.
A	Z-8-97043-280-0	CYLINDER BLOCK ASSY	1	INC.1-10,26
1	NO PART NO.	BLOCK,CYLINDER	1	
S1	Z-5-87813-205-0	SET,LINER	4	A,B,E,F,G GRD=1 INC.2 & etc.
-	Z-5-87813-205-0	SET,LINER	4	C,D GRD=1 INC.2 & etc. -1997.12
-	Z-5-87813-209-0	SET,LINER	4	C,D,H,J GRD=1 INC.2 & etc. 1998.1-
S2	Z-5-87813-206-0	SET,LINER	4	A,B,E,F,G GRD=2 INC.2 & etc.
-	Z-5-87813-206-0	SET,LINER	4	C,D GRD=2 INC.2 & etc. -1997.12
-	Z-5-87813-210-0	SET,LINER	4	C,D,H,J GRD=2 INC.2 & etc. 1998.1-
S3	Z-5-87813-207-0	SET,LINER	4	A,B,E,F,G GRD=3 INC.2 & etc.
-	Z-5-87813-207-0	SET,LINER	4	C,D GRD=3 INC.2 & etc. -1997.12
-	Z-5-87813-211-0	SET,LINER	4	C,D,H,J GRD=3 INC.2 & etc. 1998.1-
2	Z-8-97176-699-0	* LINER,CYLINDER	4	GRD=1 PISTON GRD=AX
-	Z-8-97176-700-0	* LINER,CYLINDER	4	GRD=1 PISTON GRD=CX

C-3 CYLINDER BLOCK

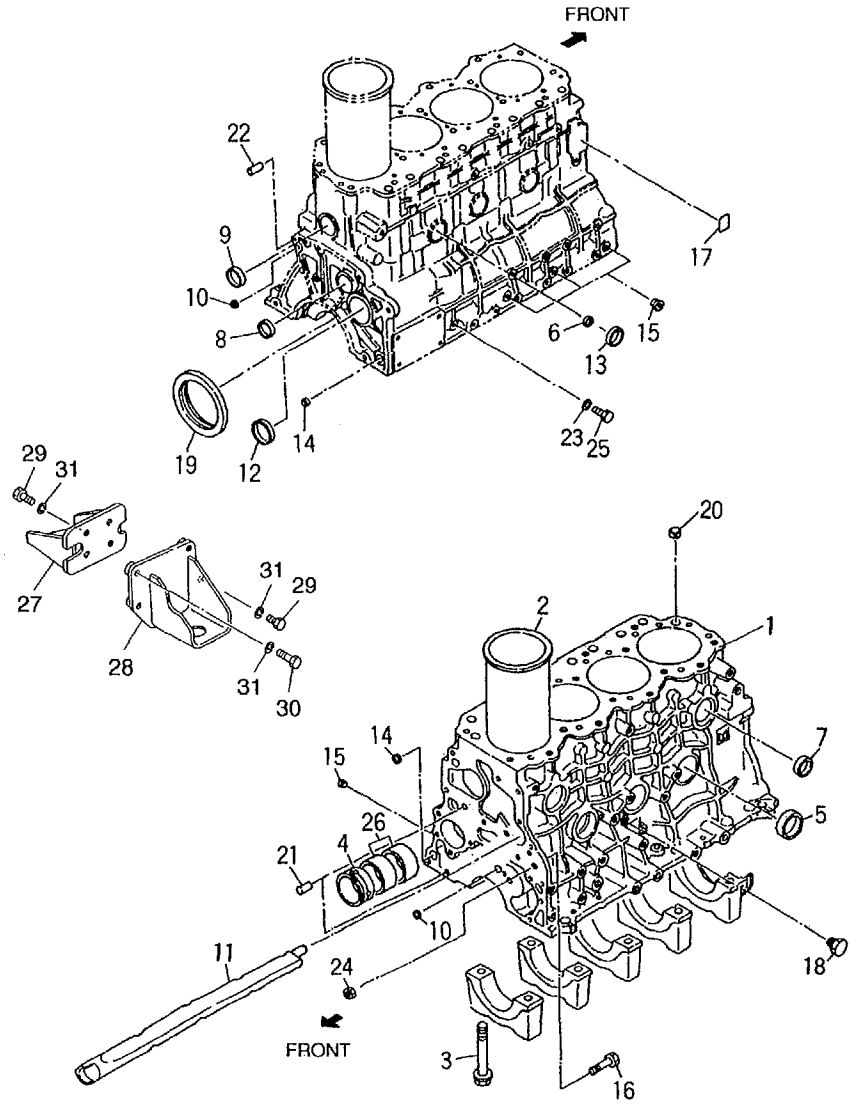

A :4JG2PJ
B :4JG2PJ-01
C :4JG2PJ-02
D :4JG2PJ-03
E :4JG2PJ-04
F :4JG2PJ-05
G :4JG2PJ-07
H :4JG2PJ-08
J :4JG2PJ-09

No.	Part No.	Description	Req'd	Remarks・Serial No.
2	Z-8-97176-701-0	* LINER,CYLINDER	4	GRD=2 PISTON GRD=AX
-	Z-8-97176-702-0	* LINER,CYLINDER	4	GRD=2 PISTON GRD=CX
-	Z-8-97176-703-0	* LINER,CYLINDER	4	GRD=3 PISTON GRD=AX
-	Z-8-97176-704-0	* LINER,CYLINDER	4	GRD=3 PISTON GRD=CX
3	Z-8-94432-642-0	BOLT	4	
4	Z-8-94427-206-2	METAL,FRONT	1	
5	Z-1-09600-005-1	CUP	3	OD=45mm
6	Z-5-11219-008-0	CUP	3	OD=18mm
7	Z-5-11219-015-0	CUP	2	OD=32mm
8	Z-5-11219-017-0	CUP	1	OD=38mm
9	Z-5-11219-018-0	CUP	1	OD=36mm
10	Z-5-09600-013-0	CUP	1	OD=12.3mm
11	Z-8-94456-794-2	DUCT	1	
12	Z-8-94250-514-0	PLUG	1	OD=56mm
13	Z-5-11219-018-0	CUP	3	OD=36mm
14	Z-5-11129-003-0	CUP	1	OD=15.6mm
-	Z-5-11129-006-0	CUP	1	
15	Z-1-09605-050-0	PLUG	2	
16	Z-8-94171-943-1	BOLT	1	
17	Z-8-97016-473-0	SEAL	1	
18	Z-9-09664-001-0	PLUG	1	
S4	Z-5-87813-225-0	SET,GASKET	1	A INC.19 & etc. -1995.2
-	Z-5-87812-637-2	SET,GASKET	1	A,C,D INC.19 & etc. 1995.3-
-	Z-5-87813-227-0	SET,GASKET	1	B INC.19 & etc. -1995.2
-	Z-5-87812-638-2	SET,GASKET	1	B INC.19 & etc. 1995.3-
-	Z-5-87813-226-0	SET,GASKET	1	C,D INC.19 & etc. -1995.2

C-4 CYLINDER BLOCK

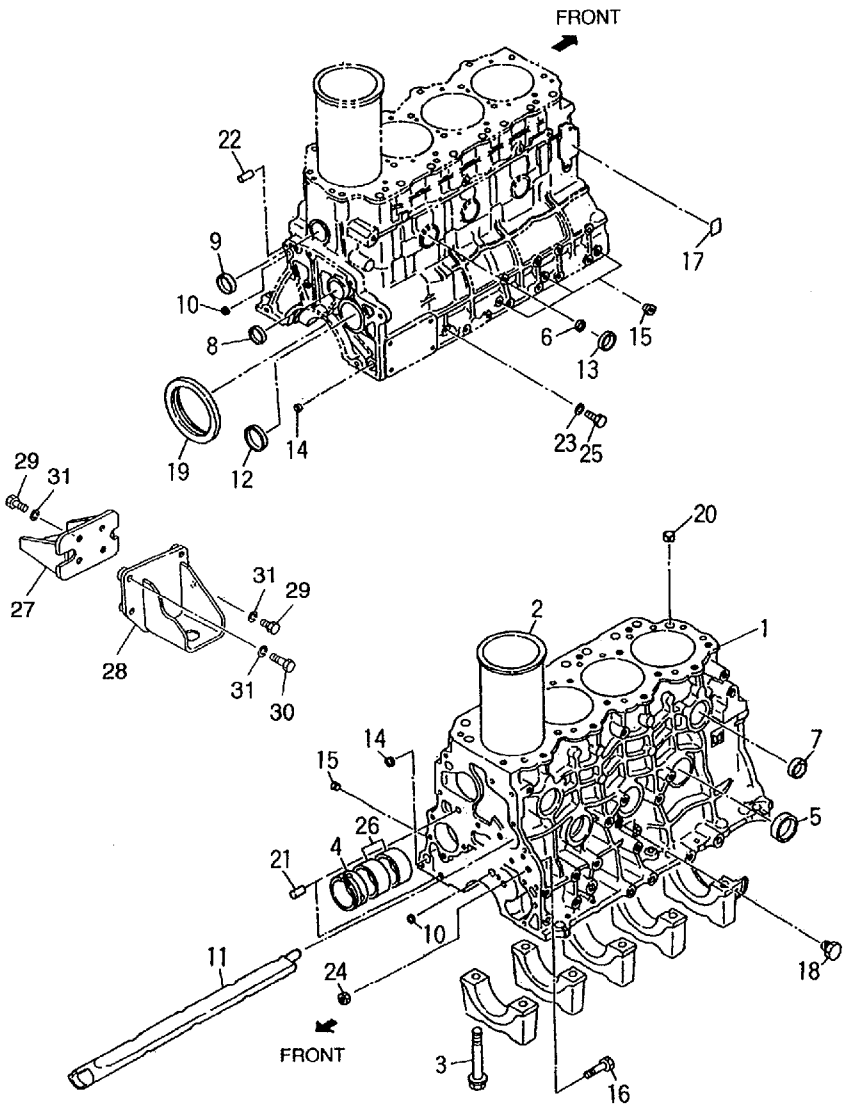

A :4JG2PJ
B :4JG2PJ-01
C :4JG2PJ-02
D :4JG2PJ-03
E :4JG2PJ-04
F :4JG2PJ-05
G :4JG2PJ-07
H :4JG2PJ-08
J :4JG2PJ-09

No.	Part No.	Description	Req'd	Remarks・Serial No.
S4	Z-5-87813-517-0	SET,GASKET	1	E,G,H,J INC.19 & etc.
-	Z-5-87813-518-0	SET,GASKET	1	F INC.19 & etc.
19	Z-8-94235-369-0	* SEAL	1	A -1994.9
-	Z-8-97020-328-0	* SEAL	1	A,C,D,E,G,H,J 1994.10-
-	Z-8-94385-562-0	* SEAL	1	B,F
20	Z-8-94453-344-0	DOWEL	2	
21	Z-9-0815-1050-0	PIN	2	
22	Z-9-0816-1022-0	PIN	1	
23	Z-9-0957-1414-0	GASKET	1	ID=14.2 OD=20mm
24	Z-9-0911-0410-0	NUT	1	A -1994.11
-	Z-9-0911-1510-0	NUT	1	1994.12-
25	Z-9-9920-2314-0	PLUG	1	
26	Z-8-94427-201-2	METAL,CENTER	2	
27	Z-8-97108-075-0	FOOT	1	
28	Z-8-97113-800-0	FOOT	1	
29	Z-9-0206-1025-0	BOLT	5	
30	Z-9-0206-1040-0	BOLT	3	
31	Z-9-0915-0510-0	WASHER	8	

C-5 PISTON,CRANKSHAFT & FLYWHEEL

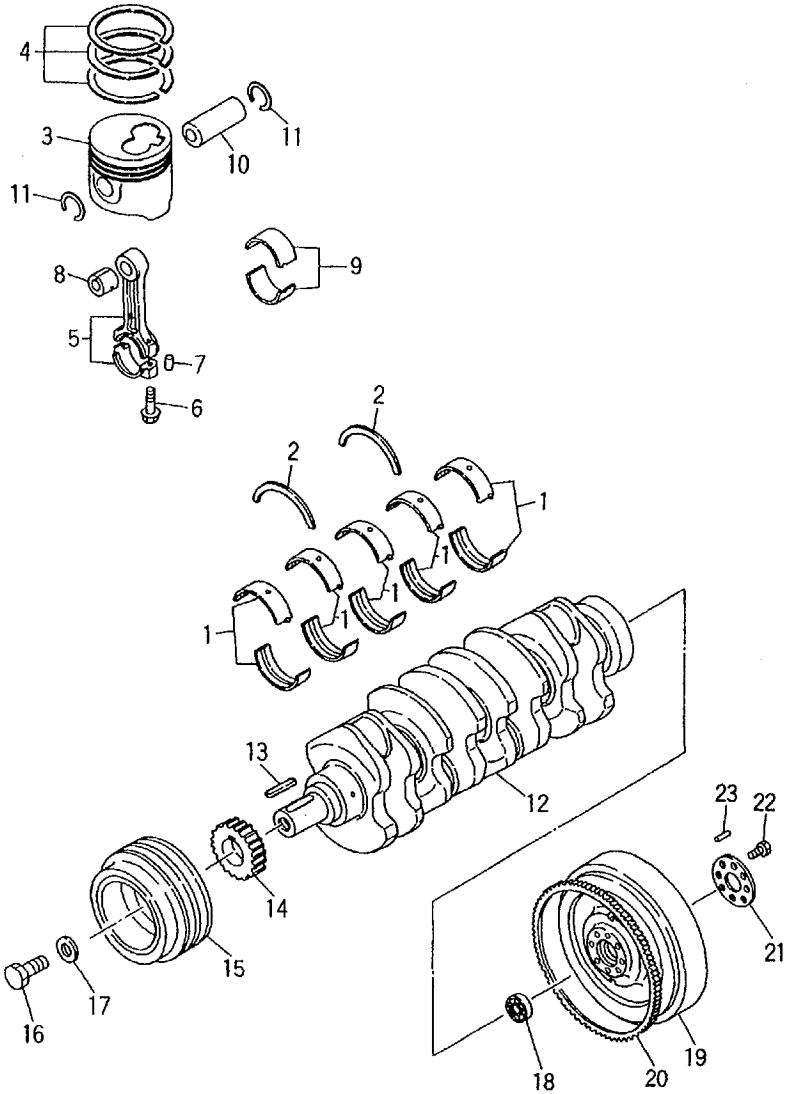

A :4JG2PJ
B :4JG2PJ-01
C :4JG2PJ-02
D :4JG2PJ-03
E :4JG2PJ-04
F :4JG2PJ-05
G :4JG2PJ-07
H :4JG2PJ-08
J :4JG2PJ-09

No.	Part No.	Description	Req'd	Remarks · Serial No.
1	Z-8-97063-258-0	SET,METAL	5	BLUE
-	Z-8-97063-259-0	SET,METAL	5	BLACK
-	Z-8-97063-260-0	SET,METAL	5	GREEN
2	Z-8-97042-262-1	METAL,THRUST	2	
S1	Z-5-87813-205-0	SET,LINER	4	A,B,E,F,G GRD=1 INC.3,4,8,10,11 & etc.
-	Z-5-87813-205-0	SET,LINER	4	C,D GRD=1 INC.3,4,8,10,11 & etc. -1997.12
-	Z-5-87813-209-0	SET,LINER	4	C,D,H,J GRD=1 INC.3,4,8,10,11 & etc. 1998.1-
S2	Z-5-87813-206-0	SET,LINER	4	A,B,E,F,G GRD=2 INC.3,4,8,10,11 & etc.
-	Z-5-87813-206-0	SET,LINER	4	C,D GRD=2 INC.3,4,8,10,11 & etc. -1997.12
-	Z-5-87813-210-0	SET,LINER	4	C,D,H,J GRD=2 INC.3,4,8,10,11 & etc. 1998.1-
S3	Z-5-87813-207-0	SET,LINER	4	A,B,E,F,G GRD=3 INC.3,4,8,10,11 & etc.
-	Z-5-87813-207-0	SET,LINER	4	C,D GRD=3 INC.3,4,8,10,11 & etc. -1997.12
-	Z-5-87813-211-0	SET,LINER	4	C,D,H,J GRD=3 INC.3,4,8,10,11 & etc. 1998.1-
3	Z-8-97176-616-0	* PISTON	4	A,B,E,F,G GRD=AX

C-6 PISTON,CRANKSHAFT & FLYWHEEL

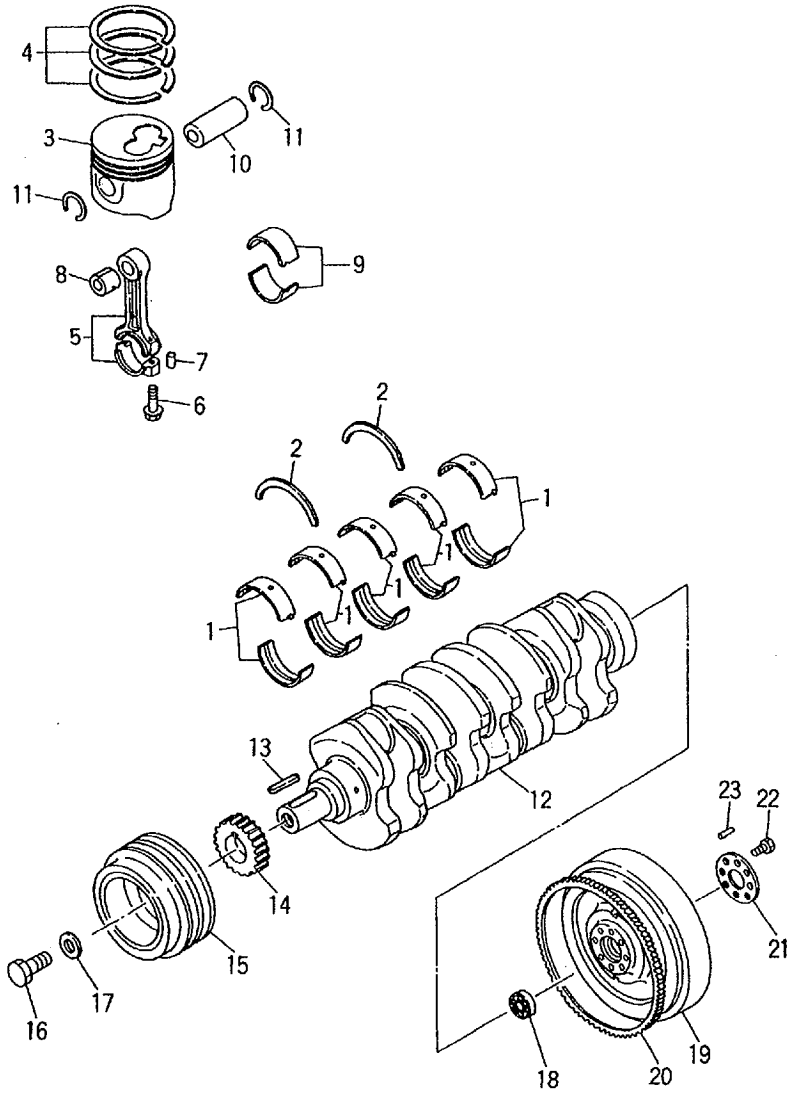

A :4JG2PJ
B :4JG2PJ-01
C :4JG2PJ-02
D :4JG2PJ-03
E :4JG2PJ-04
F :4JG2PJ-05
G :4JG2PJ-07
H :4JG2PJ-08
J :4JG2PJ-09

No.	Part No.	Description	Req'd	Remarks · Serial No.
3	Z-8-97176-617-0	* PISTON	4	A,B,E,F,G GRD=CX
-	Z-8-97176-616-0	* PISTON	4	C,D GRD=AX -1997.12
-	Z-8-97176-618-0	* PISTON	4	C,D,H,J GRD=AX 1998.1-
-	Z-8-97176-617-0	* PISTON	4	C,D GRD=CX -1997.12
-	Z-8-97176-619-0	* PISTON	4	C,D,H,J GRD=CX 1998.1-
4	Z-8-97080-215-0	* SET,RING	4	
A	Z-8-97062-300-0	CONNECTING ROD ASSY	4	INC.5-8
5	NO PART NO.	ROD,CONNECTING	4	
6	Z-8-97062-086-0	BOLT	8	
7	Z-9-0816-0508-0	PIN	8	
8	Z-8-94457-158-0	* BUSHING	4	
9	Z-8-94324-159-0	BUSHING	4	
10	Z-8-94457-008-1	* PIN	4	
11	Z-8-94460-687-0	* RING,SNAP	8	
12	Z-8-97023-182-1	CRANKSHAFT	1	-1999.9
-	Z-8-97190-930-0	CRANKSHAFT	1	1999.10-
13	Z-9-0803-0743-0	KEY,FEATHER	1	-1999.9
-	Z-8-94201-641-0	KEY,FEATHER	1	1999.10-
14	Z-8-94328-447-0	GEAR	1	
15	Z-8-94328-503-2	PULLEY	1	A,B,C,D -1995.2
-	Z-8-97128-397-1	PULLEY	1	A,B,C,D,G,H,J 1995.3-
-	Z-8-97168-073-1	PULLEY	1	E,F
16	Z-8-94153-722-1	BOLT	1	
17	Z-5-09503-127-0	WASHER	1	
18	Z-5-09800-078-0	BEARING,BALL	1	
19	Z-8-97107-954-2	FLYWHEEL	1	A,B,E,F,H INC.20

C-7 PISTON,CRANKSHAFT & FLYWHEEL

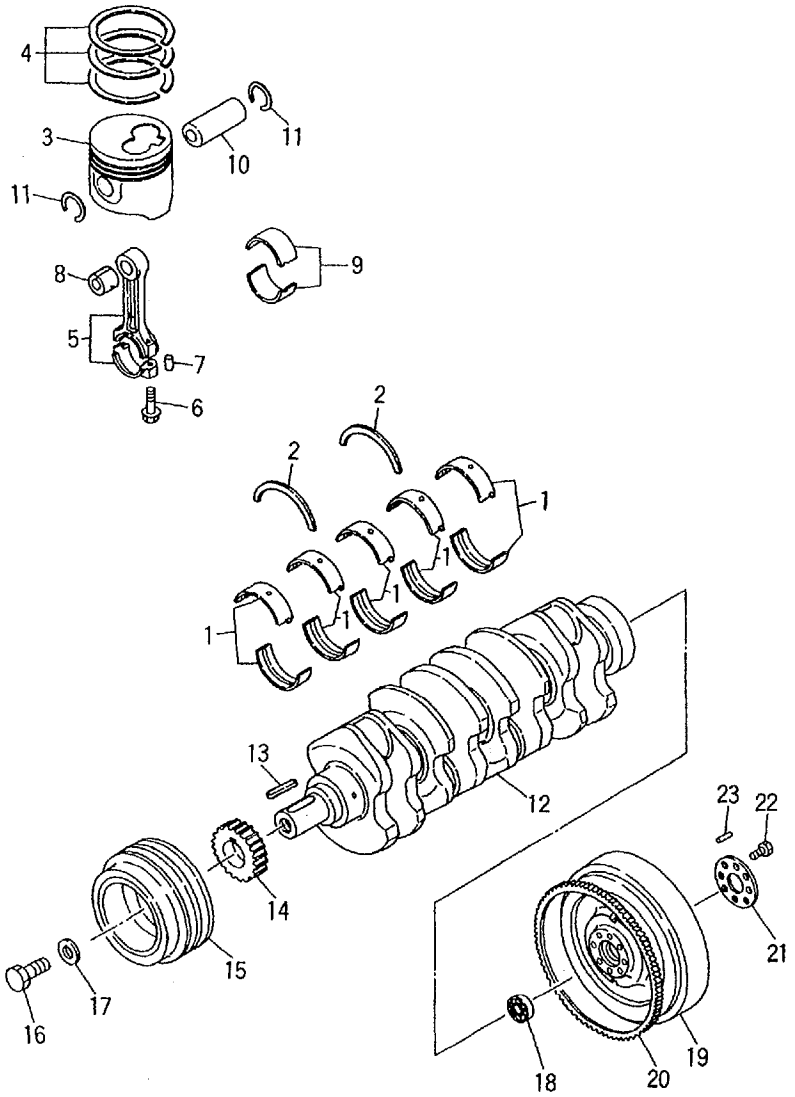

A :4JG2PJ
B :4JG2PJ-01
C :4JG2PJ-02
D :4JG2PJ-03
E :4JG2PJ-04
F :4JG2PJ-05
G :4JG2PJ-07
H :4JG2PJ-08
J :4JG2PJ-09

No.	Part No.	Description	Req'd	Remarks • Serial No.
19	Z-8-97107-954-2	FLYWHEEL	1	C,D INC.20 -1998.2
-	Z-8-97179-918-0	FLYWHEEL	1	C,D,G,J INC.20 1998.3-
20	Z-9-12333-605-1	GEAR,RING	1	
21	Z-8-94142-156-1	WASHER	1	
22	Z-8-94427-456-0	BOLT	8	
23	Z-9-0815-0616-0	PIN,STRAIGHT	2	

C-8 TIMING GEAR CASE

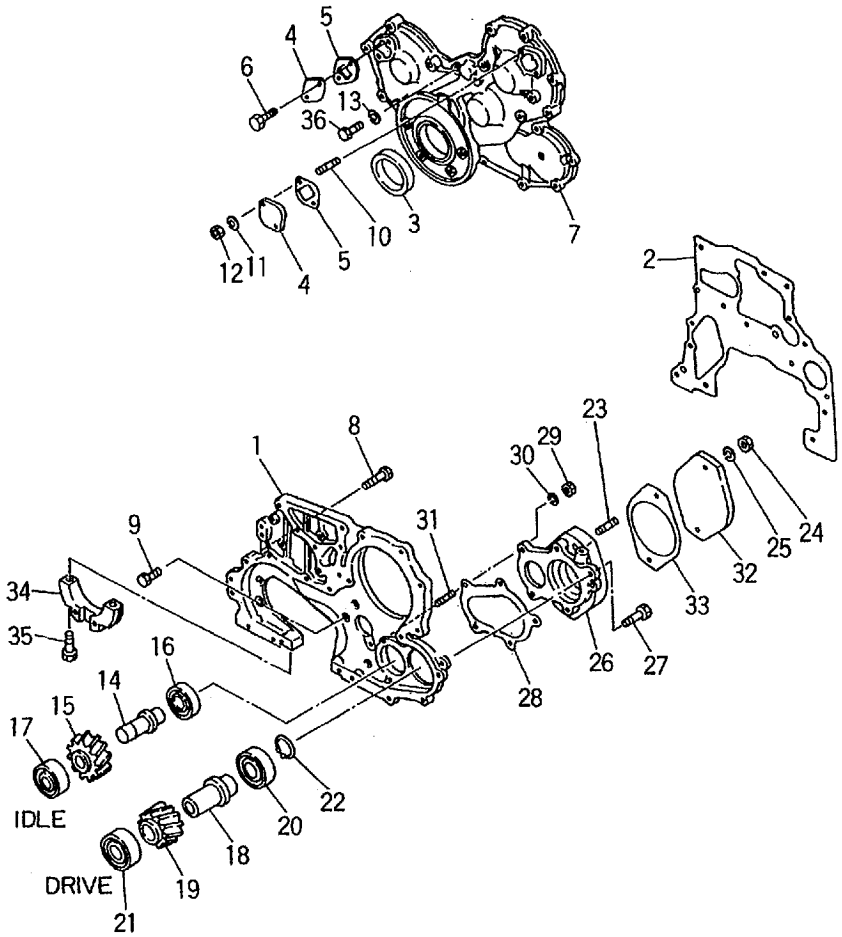

A :4JG2PJ
B :4JG2PJ-01
C :4JG2PJ-02
D :4JG2PJ-03
E :4JG2PJ-04
F :4JG2PJ-05
G :4JG2PJ-07
H :4JG2PJ-08
J :4JG2PJ-09

No.	Part No.	Description	Req'd	Remarks・Serial No.
1	Z-8-97089-867-1	CASE	1	A,B,C,D -1997.6
-	Z-8-97180-688-0	CASE	1	1997.7-
S1	Z-5-87813-225-0	SET,GASKET	1	A INC.2,3,5,28,33 & etc. -1995.2
-	Z-5-87812-637-2	SET,GASKET	1	A,C,D INC.2,3,5,28,33 & etc. 1995.3-
-	Z-5-87813-227-0	SET,GASKET	1	B INC.2,3,5,28,33 & etc. -1995.2
-	Z-5-87812-638-2	SET,GASKET	1	B INC.2,3,5,28,33 & etc. 1995.3-
-	Z-5-87813-226-0	SET,GASKET	1	C,D INC.2,3,5,28,33 & etc. -1995.2
-	Z-5-87813-517-0	SET,GASKET	1	E,G,H,J INC.2,3,5,28,33 & etc.
-	Z-5-87813-518-0	SET,GASKET	1	F INC.2,3,5,28,33 & etc.
2	Z-8-97089-881-0	* PACKING	1	A -1995.2
-	Z-8-97117-242-0	* PACKING	1	1995.3-
3	Z-5-09625-079-0	* SEAL,OIL	1	
4	Z-5-11321-009-0	COVER	2	
5	Z-8-97045-362-1	* GASKET	2	A -1994.12
-	Z-8-97118-698-0	* PACKING	2	1995.1-
6	Z-0-5004-0616-0	BOLT & WASHER	2	A,B,C,D,E,F -1998.5
-	Z-0-2808-0612-0	BOLT	2	1998.6-
7	Z-8-97089-866-1	COVER	1	A,B,C,D -1997.6
-	Z-8-97180-687-0	COVER	1	1997.7-
8	Z-0-5004-0845-0	BOLT & WASHER	7	A,B,C,D,E,F -1998.5
-	Z-0-2808-0840-0	BOLT	7	1998.6-

C-9 TIMING GEAR CASE

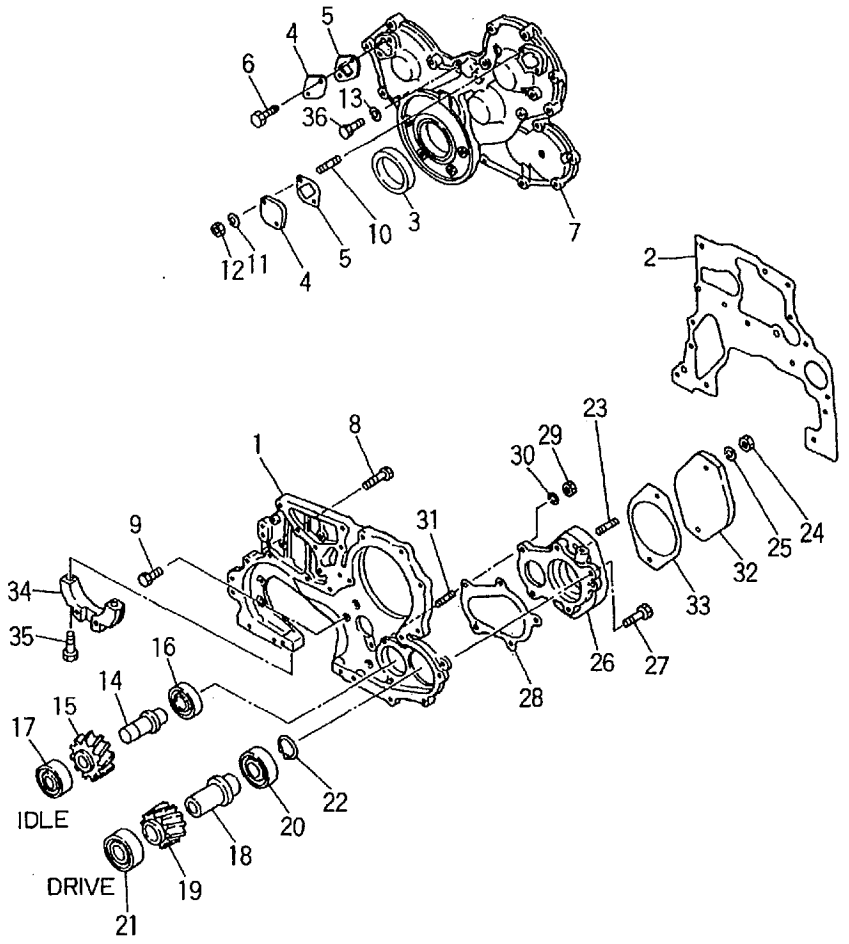

A :4JG2PJ
B :4JG2PJ-01
C :4JG2PJ-02
D :4JG2PJ-03
E :4JG2PJ-04
F :4JG2PJ-05
G :4JG2PJ-07
H :4JG2PJ-08
J :4JG2PJ-09

No.	Part No.	Description	Req'd	Remarks・Serial No.
8	Z-8-94205-987-1	BOLT	6	A,B,C,D,E,F -1998.5
-	Z-0-2808-0870-0	BOLT	6	1998.6-
-	Z-8-94205-986-1	BOLT	2	A,B,C,D,E,F -1998.5
-	Z-0-2808-0860-0	BOLT	2	1998.6-
9	Z-0-5004-0820-0	BOLT & WASHER	7	
10	Z-9-0411-0616-0	STUD	2	
11	Z-9-0915-0506-0	WASHER	2	
12	Z-9-0911-0406-0	NUT	2	A -1994.8
-	Z-9-0911-0506-0	NUT	2	1994.9-
13	Z-9-0915-0512-0	WASHER	1	
14	Z-8-94328-443-1	SHAFT	1	
15	Z-8-94328-442-0	GEAR	1	
16	Z-8-97063-366-0	BEARING,BALL	1	
17	Z-8-97109-171-0	BEARING,BALL	1	
18	Z-8-97020-571-0	SHAFT	1	
19	Z-8-94328-445-0	GEAR	1	
20	Z-8-94173-863-0	BEARING,BALL	1	
21	Z-8-97109-178-0	BEARING,BALL	1	
22	Z-9-0918-0030-0	RING,SNAP	1	
23	Z-9-0441-1025-0	STUD	2	
24	Z-9-0911-0410-0	NUT	2	
25	Z-9-0915-0510-0	WASHER	2	
26	Z-8-97107-956-1	ADAPTER	1	A,B,C,D -1996.10
-	Z-8-97141-285-0	ADAPTER	1	A,B,C,D 1996.11-1997.6
-	Z-8-97180-686-0	ADAPTER	1	1997.7-
27	Z-0-5004-0835-0	BOLT	1	A,B,C,D -1997.10
28	Z-8-94328-834-0	* PACKING	1	A,B,C,D -1997.9
-	Z-8-97186-535-0	* GASKET	1	1997.10-
29	Z-9-0911-0408-0	NUT	2	
30	Z-9-0915-0508-0	WASHER	1	
31	Z-9-0411-0820-0	STUD	2	
32	Z-5-11321-036-0	COVER	1	
33	Z-5-11322-018-0	* PACKING	1	

C-10 TIMING GEAR CASE

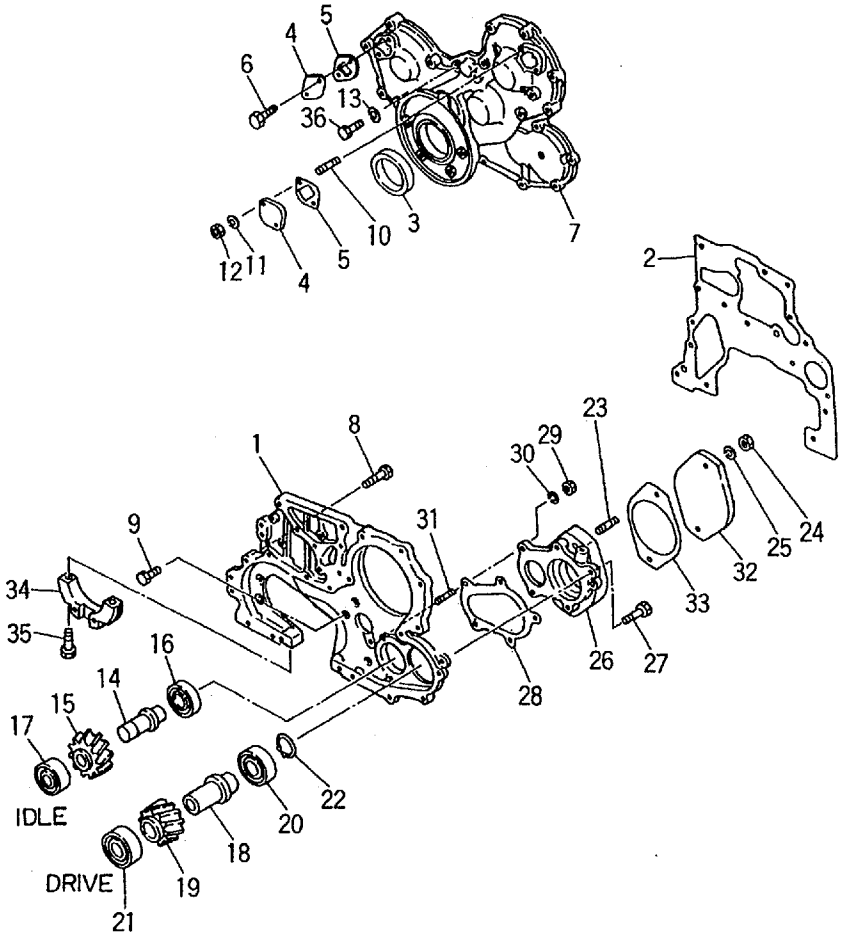

A :4JG2PJ
B :4JG2PJ-01
C :4JG2PJ-02
D :4JG2PJ-03
E :4JG2PJ-04
F :4JG2PJ-05
G :4JG2PJ-07
H :4JG2PJ-08
J :4JG2PJ-09

No.	Part No.	Description	Req'd	Remarks • Serial No.
34	Z-8-94328-440-0	PLATE	1	A -1994.10
-	Z-8-97123-785-0	PLATE	1	1994.11-
35	Z-9-0582-0845-0	BOLT	2	
36	Z-0-1080-6270-0	BOLT	1	A,B,C,D,E,F -1998.5
-	Z-0-2808-1270-0	BOLT	1	1998.6-

C-11 OIL PAN

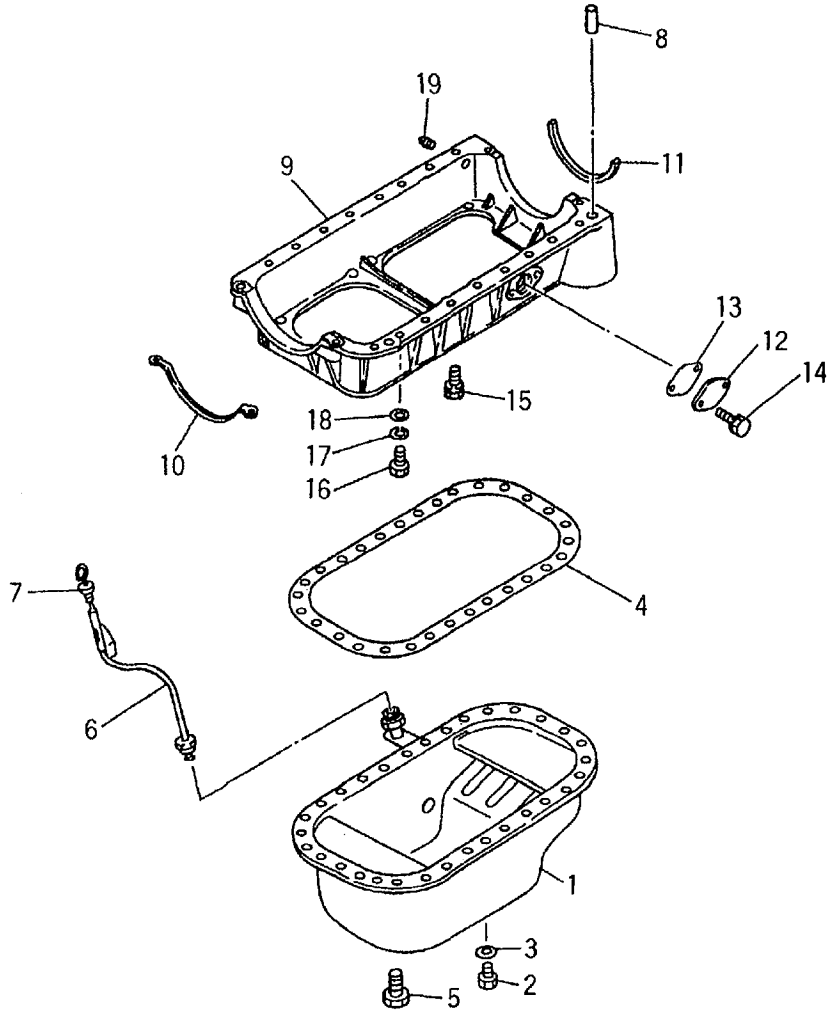

A :4JG2PJ
B :4JG2PJ-01
C :4JG2PJ-02
D :4JG2PJ-03
E :4JG2PJ-04
F :4JG2PJ-05
G :4JG2PJ-07
H :4JG2PJ-08
J :4JG2PJ-09

No.	Part No.	Description	Req'd	Remarks・Serial No.
1	Z-8-94334-739-0	PAN,OIL	1	INC.2,3
2	Z-9-9920-2320-0	PLUG	1	
S1	Z-5-87813-225-0	SET,GASKET	1	A INC.3,4 & etc. -1995.2
-	Z-5-87812-637-2	SET,GASKET	1	A,C,D INC.3,4 & etc. 1995.3-
-	Z-5-87813-227-0	SET,GASKET	1	B INC.3,4 & etc. -1995.2
-	Z-5-87812-638-2	SET,GASKET	1	B INC.3,4 & etc. 1995.3-
-	Z-5-87813-226-0	SET,GASKET	1	C,D INC.3,4 & etc. -1995.2
-	Z-5-87813-517-0	SET,GASKET	1	E,G,H,J INC.3,4 & etc.
-	Z-5-87813-518-0	SET,GASKET	1	F INC.3,4 & etc.
3	Z-1-09623-235-0	* PACKING	1	
4	Z-8-97045-322-0	* GASKET	1	
5	Z-0-5004-0616-0	BOLT	30	
6	Z-8-94468-517-0	TUBE	1	
7	Z-8-94342-385-1	GAUGE	1	
8	Z-9-09878-597-0	PIN	2	
9	Z-8-97089-798-0	CASE	1	A,B,C,D,E,F -1998.6
-	Z-8-97208-010-0	CASE	1	1998.7-
10	Z-8-94147-529-0	PACKING	1	
11	Z-8-97074-728-1	PACKING	1	A,B,C,D -1997.1
-	Z-8-97120-931-0	PACKING	1	1997.2-
12	Z-9-11219-215-0	COVER	1	
13	Z-8-94341-874-0	PACKING	1	
14	Z-0-5004-0818-0	BOLT	2	A,B,C,D,E,F -1998.5
-	Z-0-2808-0816-0	BOLT	2	1998.6-

C-12 OIL PAN

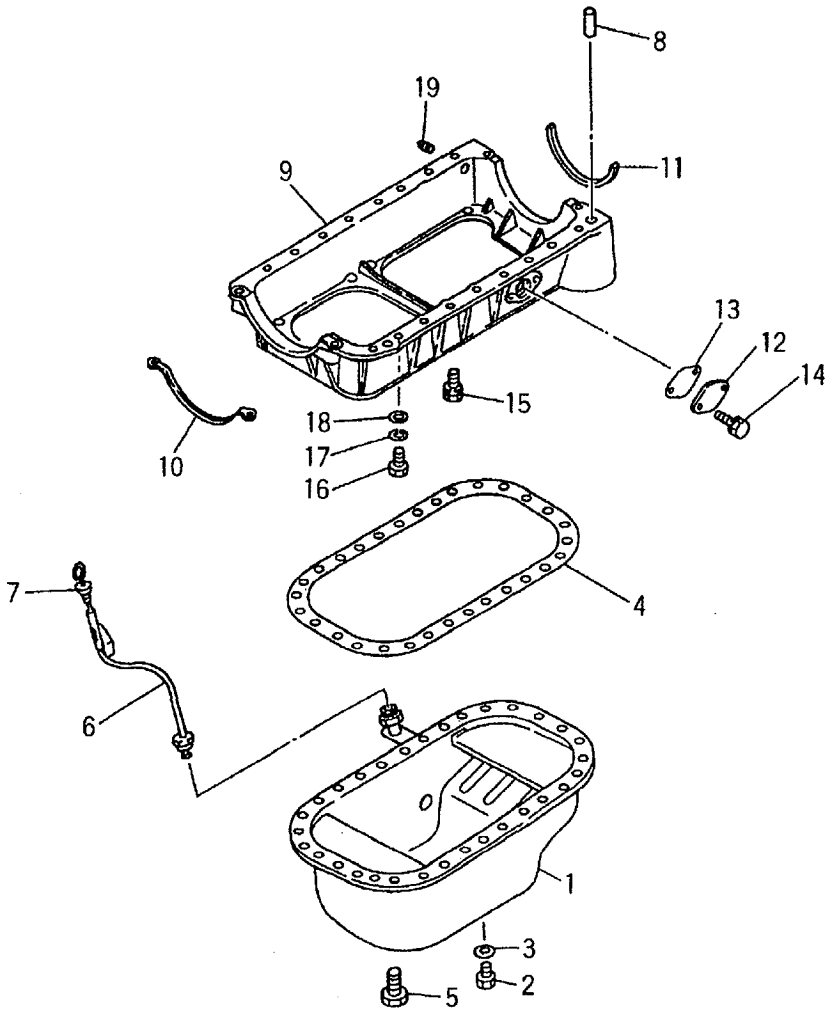

A :4JG2PJ
B :4JG2PJ-01
C :4JG2PJ-02
D :4JG2PJ-03
E :4JG2PJ-04
F :4JG2PJ-05
G :4JG2PJ-07
H :4JG2PJ-08
J :4JG2PJ-09

No.	Part No.	Description	Req'd	Remarks・Serial No.
15	Z-0-5014-0825-0	BOLT	18	A,B,C,D,E,F -1998.5
-	Z-0-2868-0825-0	BOLT	18	1998.6-
16	Z-9-09801-216-0	BOLT	4	A -1994.8
-	Z-8-97015-515-1	BOLT	2	1994.9-
-	Z-0-5014-0800-0	BOLT	2	1997.4-
17	Z-9-0915-0508-0	WASHER	4	A -1994.8
18	Z-9-0916-0508-0	WASHER	4	A -1994.8
19	Z-9-0920-4521-0	PLUG	1	A,B,C,D,E,F,G -1998.6

C-13 FLYWHEEL HOUSING

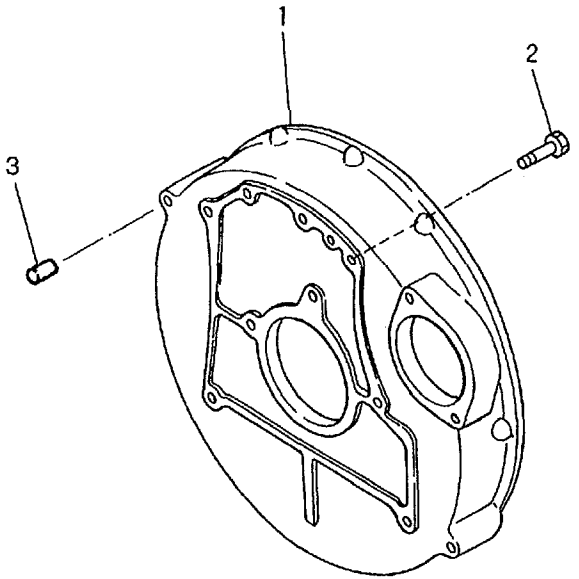

A :4JG2PJ
B :4JG2PJ-01
C :4JG2PJ-02
D :4JG2PJ-03
E :4JG2PJ-04
F :4JG2PJ-05
G :4JG2PJ-07
H :4JG2PJ-08
J :4JG2PJ-09

No.	Part No.	Description	Req'd	Remarks • Serial No.
1	Z-8-97108-076-2	HOUSING	1	A,C,D -1996.10
-	Z-5-11341-104-3	HOUSING	1	A,C,D,E,F,G,H,J 1996.11-
-	Z-8-97108-076-2	HOUSING	1	B
2	Z-0-2080-1025-0	BOLT	3	
-	Z-0-2080-1225-0	BOLT	2	
-	Z-5-09000-227-0	BOLT	3	
3	Z-9-0815-1228-0	PIN	2	

D-2 CYLINDER HEAD & COVER

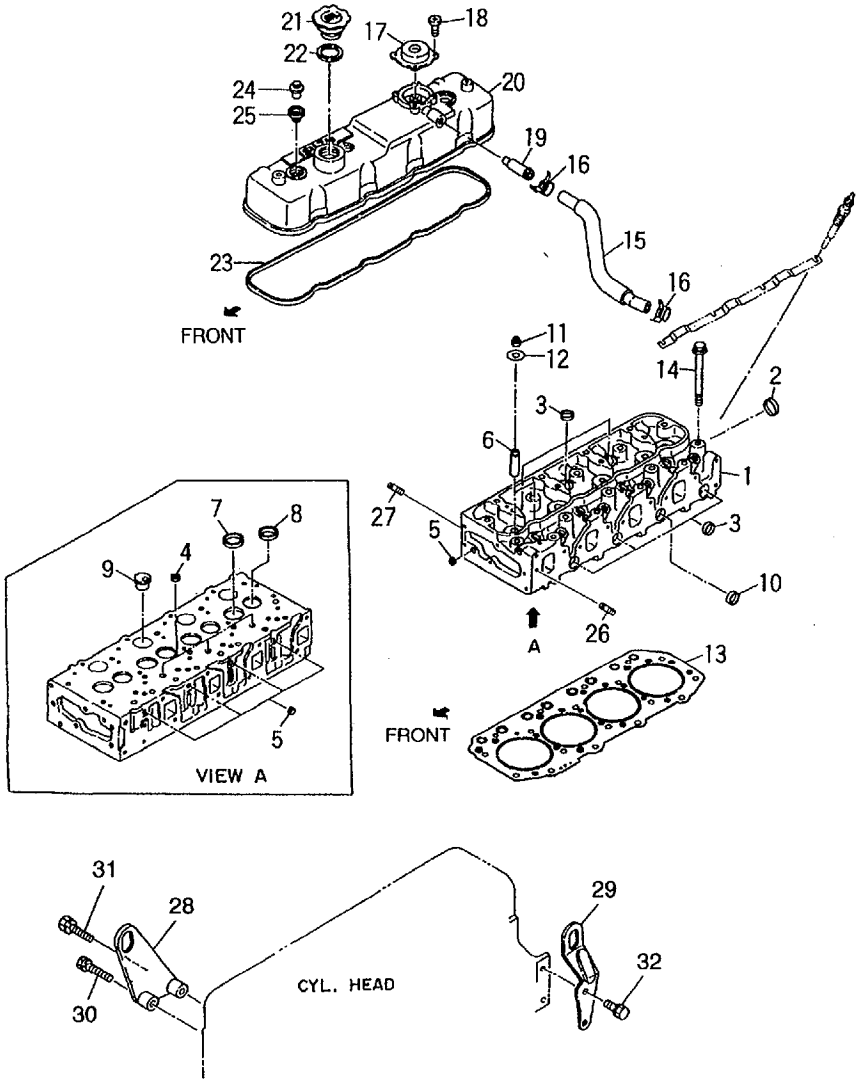

A :4JG2PJ
B :4JG2PJ-01
C :4JG2PJ-02
D :4JG2PJ-03
E :4JG2PJ-04
F :4JG2PJ-05
G :4JG2PJ-07
H :4JG2PJ-08
J :4JG2PJ-09

No.	Part No.	Description	Req'd	Remarks・Serial No.
A1	Z-8-97089-280-1	CYLINDER HEAD ASSY	1	A,B,E,F,G INC.1-9
-	Z-8-97089-280-1	CYLINDER HEAD ASSY	1	C,D INC.1-9 -1997.12
-	Z-8-97120-278-2	CYLINDER HEAD ASSY	1	C,D,H,J INC.1-9 1998.1-
1	NO PART NO.	HEAD,CYLINDER	1	
2	Z-1-09600-005-1	CUP	1	OD=45mm
3	Z-1-09600-011-2	CUP	6	OD=22mm -1999.5
-	Z-8-97209-609-0	CUP	6	OD=22mm 1999.6-
4	Z-5-11129-006-0	CUP	3	OD=16mm
5	Z-5-09600-013-0	CUP	5	OD=12.3mm
6	Z-5-11721-016-0	VALVE,GUIDE	8	
7	Z-8-97083-162-0	SET,VALVE	4	
8	Z-8-94130-559-0	INSERT	4	
9	Z-8-97089-278-0	PLUG	4	A,B,E,F,G
-	Z-8-97089-278-0	PLUG	4	C,D -1999.3
-	Z-8-97089-280-0	PLUG	4	C,D,H,J 1999.4-
10	Z-1-09600-011-2	CUP	1	A,B,D,E,F,G,H,J -1999.5
-	Z-8-97209-609-0	CUP	1	A,B,D,E,F,G,H,J 1999.6-
S1	Z-5-87813-225-0	SET,GASKET	1	A INC.11,13,23,25 & etc. -1995.2
-	Z-5-87812-637-2	SET,GASKET	1	A,C,D INC.11,13,23,25 & etc. 1995.3-
-	Z-5-87813-227-0	SET,GASKET	1	B INC.11,13,23,25 & etc. -1995.2
-	Z-5-87812-638-2	SET,GASKET	1	B INC.11,13,23,25 & etc. 1995.3-

D-3 CYLINDER HEAD & COVER

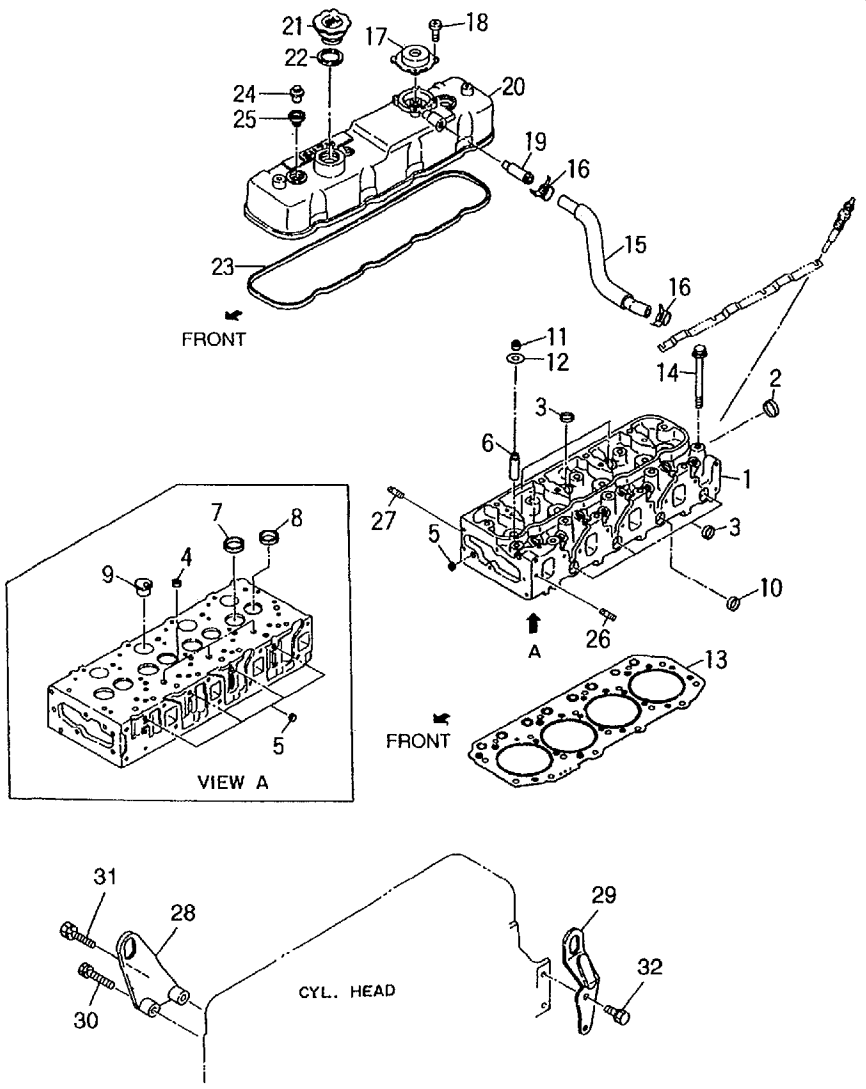

A :4JG2PJ
B :4JG2PJ-01
C :4JG2PJ-02
D :4JG2PJ-03
E :4JG2PJ-04
F :4JG2PJ-05
G :4JG2PJ-07
H :4JG2PJ-08
J :4JG2PJ-09

No.	Part No.	Description	Req'd	Remarks・Serial No.
S1	Z-5-87813-226-0	SET,GASKET	1	C,D INC.11,13,23,25 & etc. -1995.2
-	Z-5-87813-517-0	SET,GASKET	1	E,G,H,J INC.11,13,23,25 & etc.
-	Z-5-87813-518-0	SET,GASKET	1	F INC.11,13,23,25 & etc.
11	Z-5-12569-006-0	* SEAL	8	A,B,C,D -1996.4
-	Z-8-97120-307-0	* SEAL	8	1996.5-
12	Z-5-12563-001-0	SEAT	8	
13	Z-8-97066-197-0	* GASKET	1	t=1.65mm 2 HOLE
14	Z-8-94455-667-0	BOLT	18	
15	Z-8-97114-224-1	HOSE	1	
16	Z-8-94121-113-1	CLIP	2	
17	Z-8-94250-172-0	VENTILATOR	1	
18	Z-9-0391-0408-0	BOLT	4	
19	Z-8-94250-615-1	PIPE	1	
20	Z-8-97081-742-1	COVER	1	A -1995.4
-	Z-8-94476-696-0	COVER	1	1995.5-
21	Z-8-94133-207-5	CAP	1	INC.22
22	Z-8-94123-623-1	PACKING	1	
23	Z-8-94247-903-1	* PACKING	1	A,B,C,D -1995.8
-	Z-8-97118-768-0	* PACKING	1	A,B,C,D,E,F,G 1995.9-1999.4
-	Z-8-97161-131-0	* PACKING	1	1999.5-
24	Z-8-94173-430-0	NUT	3	
25	Z-8-94153-051-0	* PACKING	3	A -1995.2
-	Z-8-94202-456-3	* PACKING	3	1995.3-
26	Z-9-0411-0825-0	STUD	2	A,B,D,E,F,G,H,J 1995.11-
-	Z-9-0411-0825-0	STUD	1	C
-	Z-9-09630-034-1	STUD	1	C 1995.11-
27	Z-9-0411-0835-0	STUD	2	
28	Z-8-94408-206-0	HANGER	1	

D-4 CYLINDER HEAD & COVER

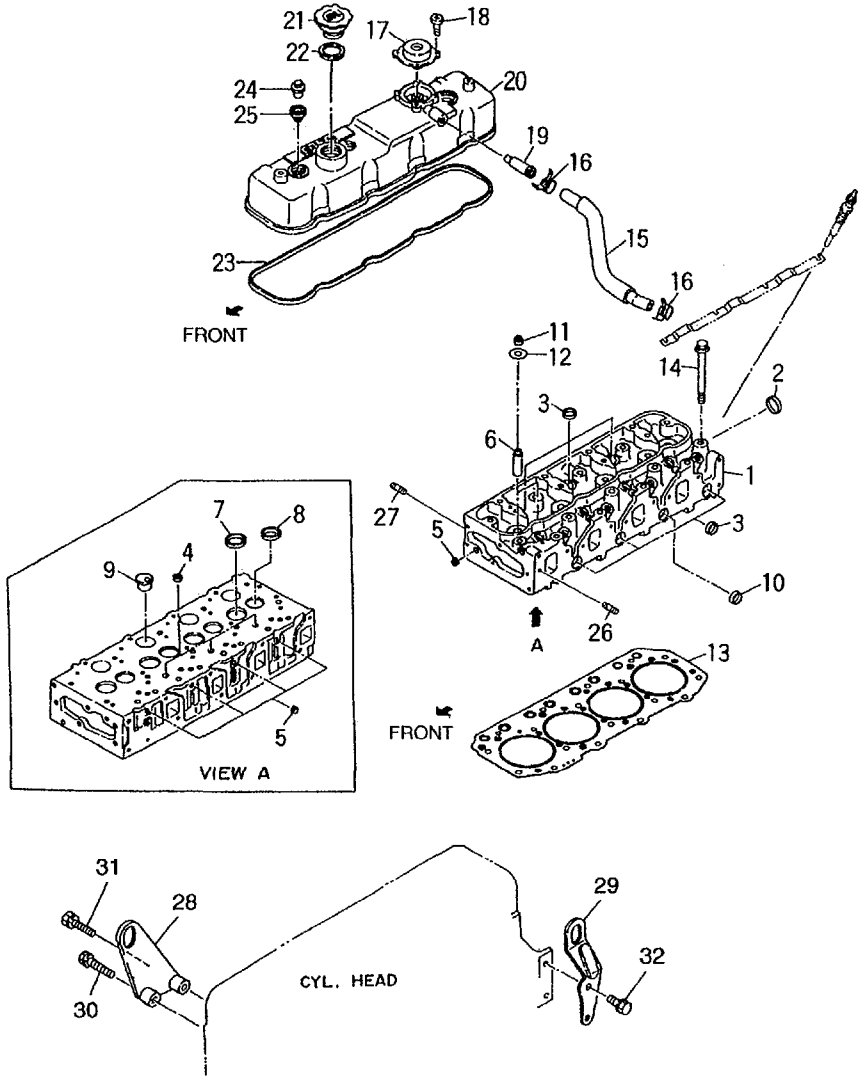

A :4JG2PJ
B :4JG2PJ-01
C :4JG2PJ-02
D :4JG2PJ-03
E :4JG2PJ-04
F :4JG2PJ-05
G :4JG2PJ-07
H :4JG2PJ-08
J :4JG2PJ-09

No.	Part No.	Description	Req'd	Remarks • Serial No.
29	Z-8-97107-739-0	HANGER	1	
30	Z-0-5004-1035-0	BOLT & WASHER	1	A,B,C,D,E,F -1998.5
-	Z-0-2868-1040-0	BOLT	1	1998.6-
31	Z-0-5004-0835-0	BOLT & WASHER	1	A,B,C,D,E,F -1998.5
-	Z-0-2868-0835-0	BOLT	1	1998.6-
32	Z-0-5004-0822-0	BOLT & WASHER	2	A,B,C,D -1996.11
-	Z-0-5004-0818-0	BOLT & WASHER	2	A,B,C,D,E,F 1996.12-1998.5
-	Z-0-2868-0820-0	BOLT	2	1998.6-

D-5 VALVE MECHANISM

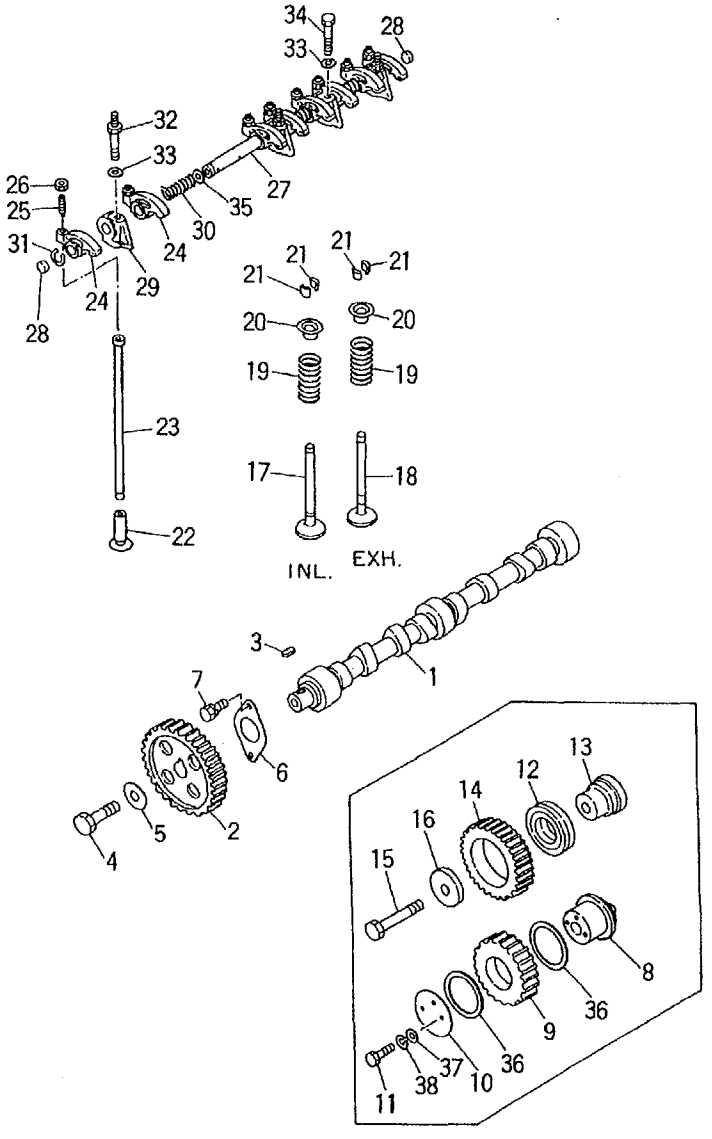

A :4JG2PJ
B :4JG2PJ-01
C :4JG2PJ-02
D :4JG2PJ-03
E :4JG2PJ-04
F :4JG2PJ-05
G :4JG2PJ-07
H :4JG2PJ-08
J :4JG2PJ-09

No.	Part No.	Description	Req'd	Remarks • Serial No.
1	Z-8-97073-684-0	CAMSHAFT	1	
2	Z-8-94328-448-0	GEAR	1	
3	Z-9-0800-0718-0	KEY,FEATHER	1	
4	Z-5-09000-069-0	BOLT	1	
5	Z-5-12519-002-1	WASHER	1	
6	Z-8-94110-480-1	PLATE	1	
7	Z-0-5004-0816-0	BOLT	2	
8	Z-8-97115-129-0	SHAFT	1	
9	Z-8-97115-131-0	GEAR	1	
10	Z-8-94171-289-0	COLLAR	1	
11	Z-9-0106-5865-0	BOLT	2	
12	Z-8-94129-386-0	BEARING,BALL	1	A,B,C,D -1997.1
-	Z-8-97174-558-0	BEARING	1	1997.2-
13	Z-8-97089-932-0	SHAFT	1	
14	Z-8-97020-570-0	GEAR	1	
15	Z-8-94129-384-0	BOLT	1	
16	Z-8-97101-502-1	WASHER	1	
17	Z-8-97080-214-1	VALVE,INLET	4	A,B,C,D -1995.5
-	Z-8-97131-729-0	VALVE,INLET	4	1995.6-
18	Z-8-97065-970-0	VALVE,EXHAUST	4	
19	Z-8-94252-536-1	SPRING	8	
20	Z-8-94133-731-2	SEAT	8	
21	Z-5-12565-004-0	COLLAR	16	
22	Z-8-94438-305-0	TAPPET	8	
23	Z-8-97071-673-0	ROD,PUSH	8	
24	Z-8-94152-344-0	ARM,ROCKER	8	
25	Z-8-94152-283-1	SCREW	8	
26	Z-9-0911-1508-0	NUT	8	
27	Z-8-97036-197-0	SHAFT	1	
28	Z-9-12626-005-0	PLUG	2	
29	Z-8-94152-345-1	BRACKET	4	
30	Z-8-94341-905-0	SPRING	3	
31	Z-9-0918-0019-0	RING,SNAP	2	
32	Z-8-94433-304-0	BOLT	3	
33	Z-9-0916-4010-0	WASHER	4	
34	Z-8-94433-302-0	BOLT	1	
35	Z-8-94341-906-0	WASHER	6	
36	Z-8-97089-845-0	WASHER	2	

D-6 VALVE MECHANISM

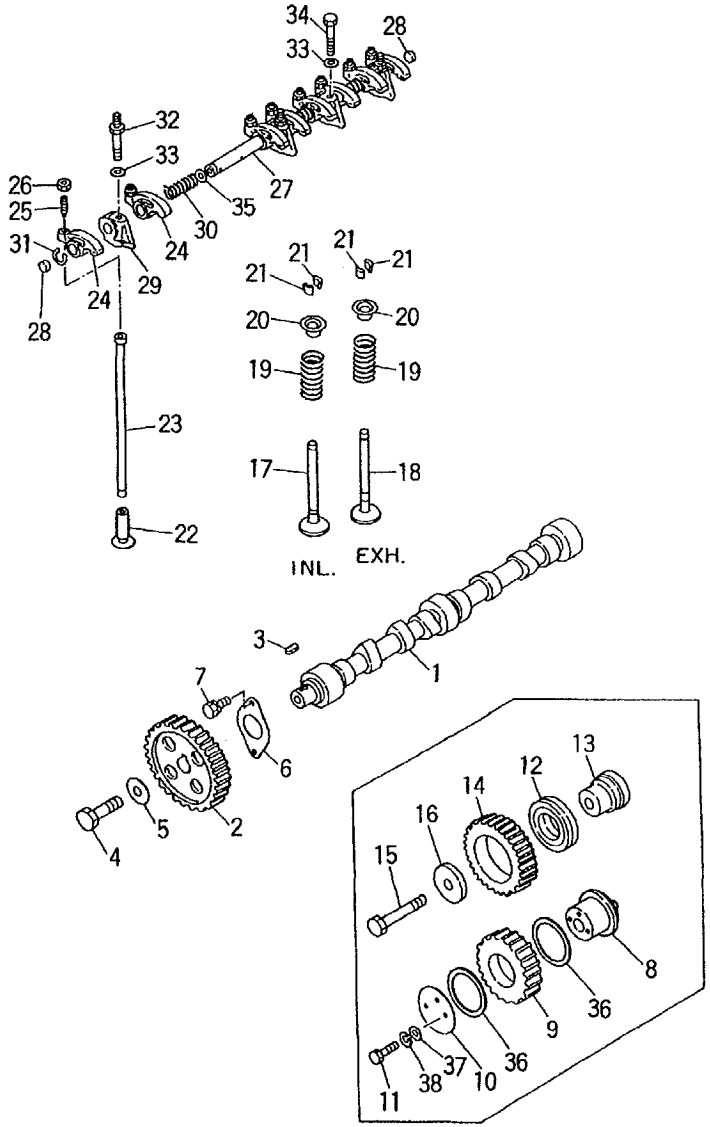

A :4JG2PJ
B :4JG2PJ-01
C :4JG2PJ-02
D :4JG2PJ-03
E :4JG2PJ-04
F :4JG2PJ-05
G :4JG2PJ-07
H :4JG2PJ-08
J :4JG2PJ-09

No.	Part No.	Description	Req'd	Remarks • Serial No.
37	Z-9-0916-4608-0	WASHER	2	
38	Z-9-0915-0808-0	WASHER,LOCK	2	

E-2 AIR INTAKE & EXHAUST SYSTEM

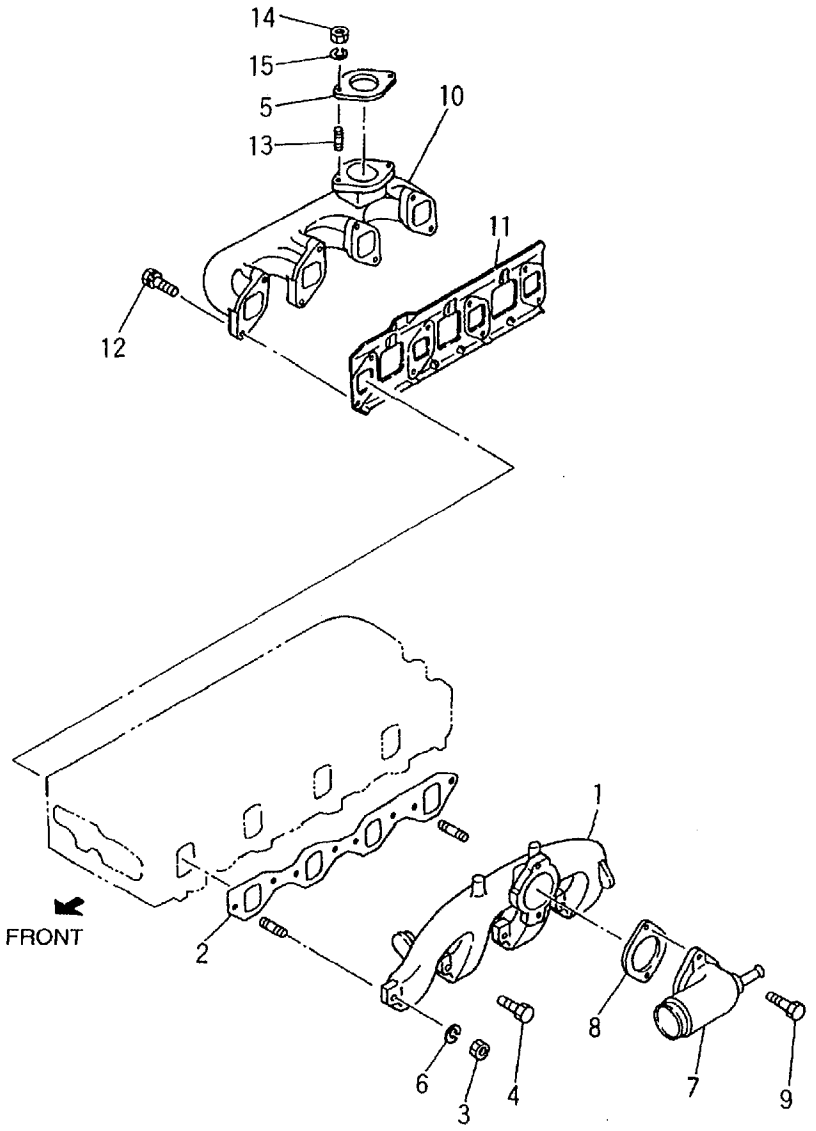

A :4JG2PJ
B :4JG2PJ-01
C :4JG2PJ-02
D :4JG2PJ-03
E :4JG2PJ-04
F :4JG2PJ-05
G :4JG2PJ-07
H :4JG2PJ-08
J :4JG2PJ-09

No.	Part No.	Description	Req'd	Remarks・Serial No.
1	Z-8-94407-616-2	MANIFOLD,INLET	1	A,B,C,D -1996.9
-	Z-8-94109-901-4	MANIFOLD,INLET	1	A,B,C,D,G,H,J 1996.10-
-	Z-8-94407-616-2	MANIFOLD,INLET	1	E,F
S1	Z-5-87813-225-0	SET,GASKET	1	A INC.2,8,11 & etc. -1995.2
-	Z-5-87812-637-2	SET,GASKET	1	A,C,D INC.2,8,11 & etc. 1995.3-
-	Z-5-87813-227-0	SET,GASKET	1	B INC.2,8,11 & etc. -1995.2
-	Z-5-87812-638-2	SET,GASKET	1	B INC.2,8,11 & etc. 1995.3-
-	Z-5-87813-226-0	SET,GASKET	1	C,D INC.2,8,11 & etc. -1995.2
-	Z-5-87813-517-0	SET,GASKET	1	E,G,H,J INC.2,8,11 & etc.
-	Z-5-87813-518-0	SET,GASKET	1	F INC.2,8,11 & etc.
2	Z-8-97066-741-1	* PACKING	1	-1999.3
-	Z-8-97212-540-0	* PACKING	1	1999.4-
3	Z-9-0911-0508-0	NUT	2	
4	Z-0-5004-0825-0	BOLT & WASHER	6	A,B,C,D,E,F -1998.5
-	Z-0-2808-0825-0	BOLT	6	1998.6-
5	Z-8-97016-101-0	GASKET	1	
6	Z-9-0915-0508-0	WASHER	2	
7	Z-8-97107-958-1	PIPE	1	
8	Z-8-97035-883-0	* PACKING	1	
9	Z-0-5005-1025-0	BOLT & WASHER	2	A,B,C,D,E,F -1998.5
-	Z-0-2878-1025-0	BOLT	2	1998.6-
10	Z-8-97021-690-0	MANIFOLD,EXHAUST	1	
11	Z-8-97016-100-0	* GASKET	1	A -1994.9

E-3 AIR INTAKE & EXHAUST SYSTEM

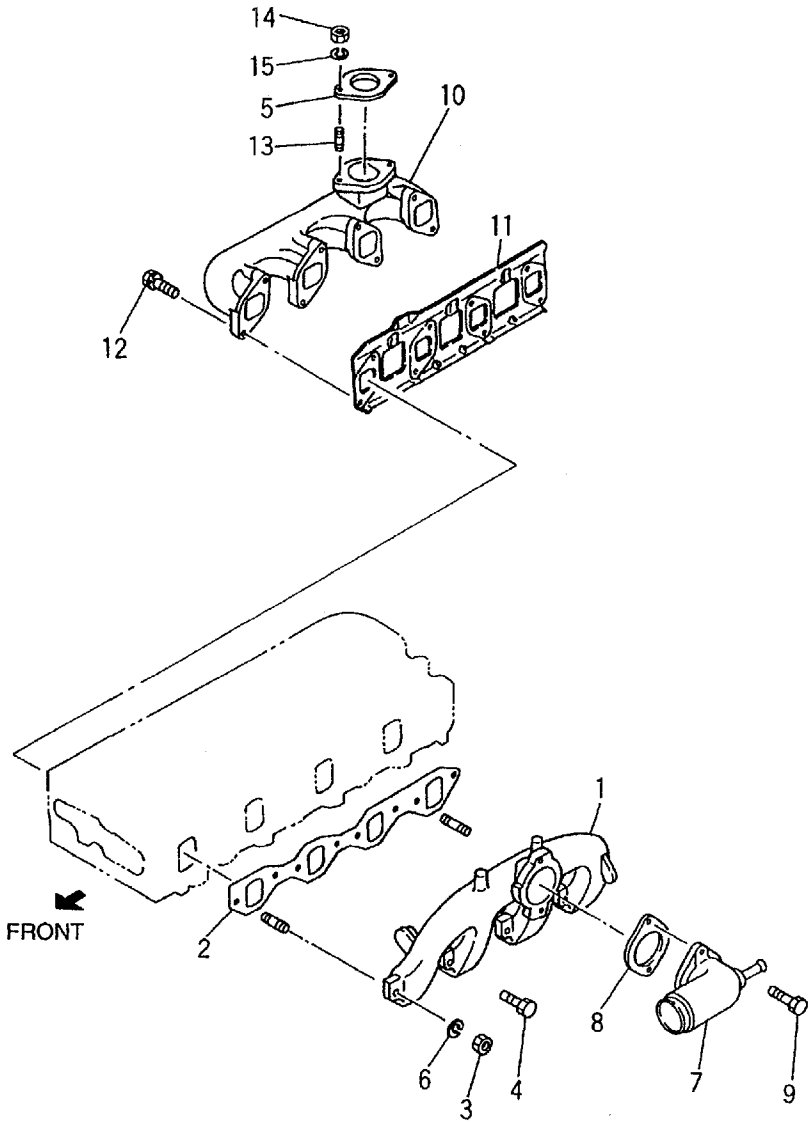

A :4JG2PJ
B :4JG2PJ-01
C :4JG2PJ-02
D :4JG2PJ-03
E :4JG2PJ-04
F :4JG2PJ-05
G :4JG2PJ-07
H :4JG2PJ-08
J :4JG2PJ-09

No.	Part No.	Description	Req'd	Remarks • Serial No.
11	Z-8-97109-216-1	* GASKET	1	1994.10-
12	Z-0-5004-0830-0	BOLT	6	
13	Z-9-0411-0825-0	STUD	2	
14	Z-9-0911-0408-0	NUT	2	
15	Z-9-0915-0508-0	WASHER	2	

F-2 OIL PUMP

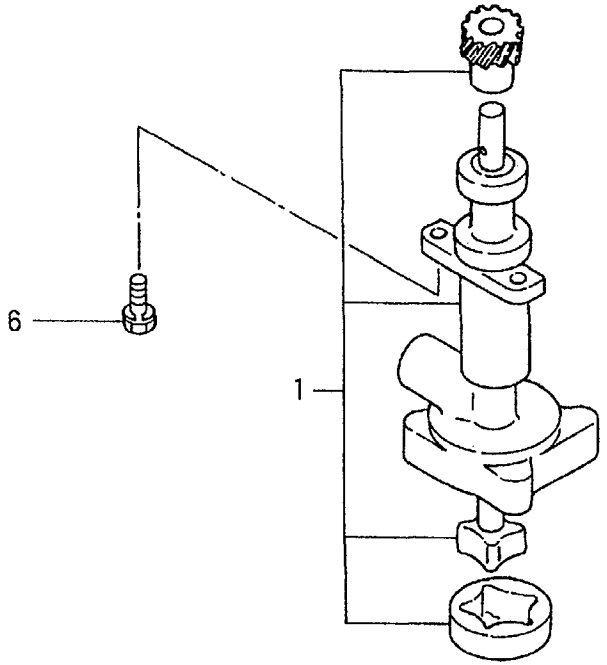

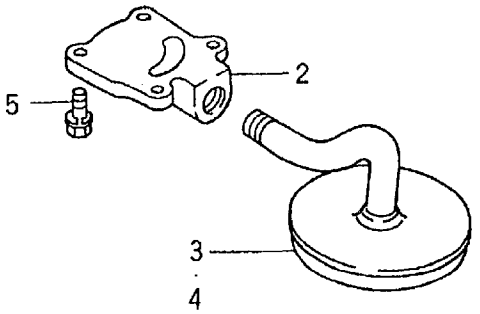

A :4JG2PJ
B :4JG2PJ-01
C :4JG2PJ-02
D :4JG2PJ-03
E :4JG2PJ-04
F :4JG2PJ-05
G :4JG2PJ-07
H :4JG2PJ-08
J :4JG2PJ-09

No.	Part No.	Description	Req'd	Remarks • Serial No.
A	Z-8-94428-798-3	OIL PUMP ASSY	1	INC.1-5
1	Z-8-97044-112-0	SET,GEAR	1	
2	Z-9-13113-077-1	COVER	1	
3	Z-9-13140-120-0	STRAINER	1	INC.4
4	Z-9-13143-010-0	GAUZE	1	
5	Z-9-0190-0825-0	BOLT & WASHER	4	
6	Z-0-5014-0825-0	BOLT	2	

F-3 OIL FILTER

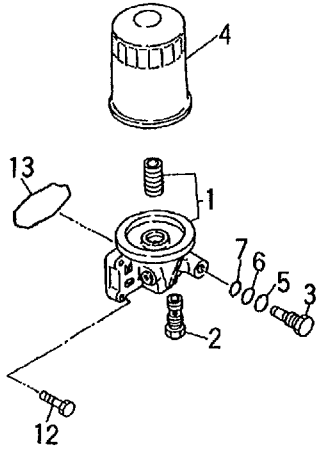

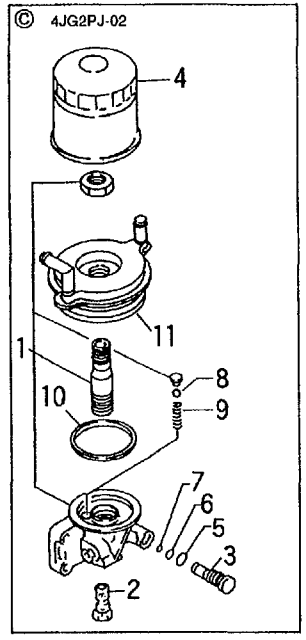

A :4JG2PJ
B :4JG2PJ-01
C :4JG2PJ-02
D :4JG2PJ-03
E :4JG2PJ-04
F :4JG2PJ-05
G :4JG2PJ-07
H :4JG2PJ-08
J :4JG2PJ-09

No.	Part No.	Description	Req'd	Remarks • Serial No.
A1	Z-8-94462-137-1	OIL FILTER ASSY	1	A,B,D,E,F,G,H,J INC.1-7
A2	Z-8-94340-696-1	OIL FILTER ASSY	1	C INC.1-11
1	Z-8-94329-622-0	BODY,FILTER	1	A,B,D,E,F,G,H,J
-	Z-8-94360-429-1	BODY	1	C INC.2,3,5-9
2	Z-8-94167-882-0	VALVE	1	A,B,D,E,F,G,H,J
-	Z-8-94450-772-0	VALVE	1	C
3	Z-8-94167-883-0	PLUG	1	
4	Z-8-97049-708-0	ELEMENT,OIL	1	A,B,D,E,F,G,H,J
-	Z-8-94360-427-1	FILTER,OIL	1	C INC.5-7
5	Z-8-94167-884-0	O-RING	1	
6	Z-8-94167-885-0	O-RING	1	
7	Z-8-94167-886-0	O-RING	1	
8	Z-9-00097-011-0	BALL	1	C
9	Z-8-94401-679-0	SPRING	1	C
10	Z-8-97126-492-0	GASKET	1	C
11	Z-8-94360-428-0	COOLER,OIL	1	C
12	Z-0-5014-0830-0	BOLT & WASHER	4	A,B,C,D,E,F -1998.5
-	Z-0-2868-0830-0	BOLT	4	1998.6-
S1	Z-5-87813-225-0	SET,GASKET	1	A INC.13 & etc. -1995.2
-	Z-5-87812-637-2	SET,GASKET	1	A,C,D INC.13 & etc. 1995.3-
-	Z-5-87813-227-0	SET,GASKET	1	B INC.13 & etc. -1995.2
-	Z-5-87812-638-2	SET,GASKET	1	B INC.13 & etc. 1995.3-
-	Z-5-87813-226-0	SET,GASKET	1	C,D INC.13 & etc. -1995.2
-	Z-5-87813-517-0	SET,GASKET	1	E,G,H,J INC.13 & etc.

F-4 OIL FILTER

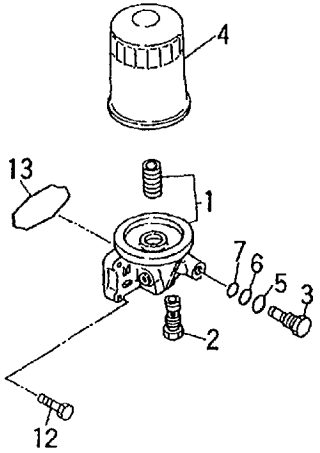

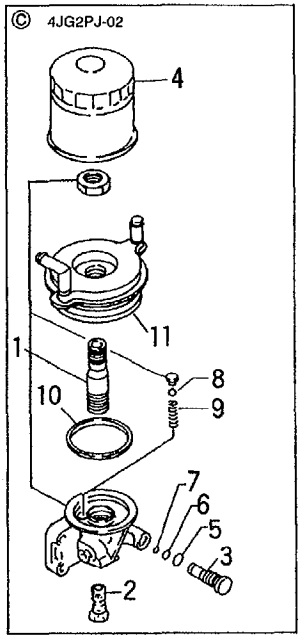

A :4JG2PJ
B :4JG2PJ-01
C :4JG2PJ-02
D :4JG2PJ-03
E :4JG2PJ-04
F :4JG2PJ-05
G :4JG2PJ-07
H :4JG2PJ-08
J :4JG2PJ-09

No.	Part No.	Description	Req'd	Remarks · Serial No.
S1	Z-5-87813-518-0	SET,GASKET	1	F INC.13 & etc.
13	Z-8-97065-983-0	* PACKING	1	

F-5 OIL PIPE

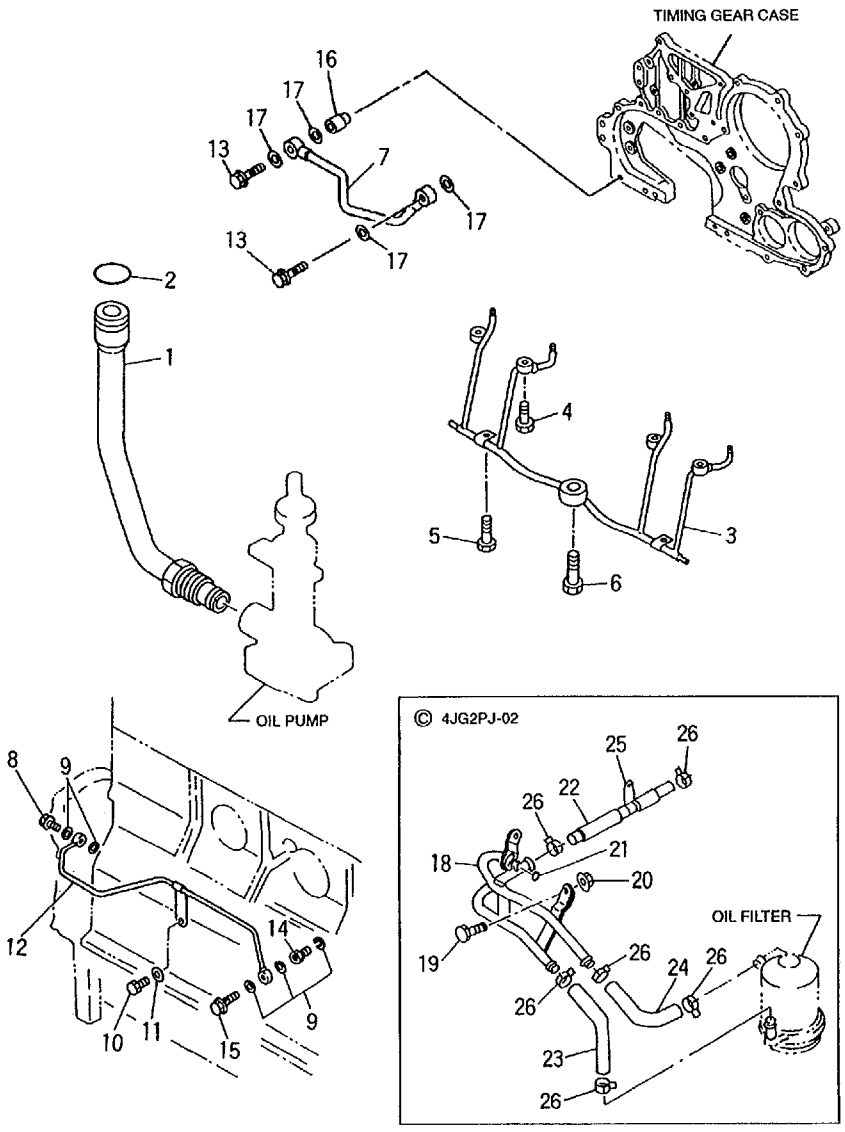

A :4JG2PJ
B :4JG2PJ-01
C :4JG2PJ-02
D :4JG2PJ-03
E :4JG2PJ-04
F :4JG2PJ-05
G :4JG2PJ-07
H :4JG2PJ-08
J :4JG2PJ-09

No.	Part No.	Description	Req'd	Remarks・Serial No.
1	Z-8-94434-827-1	PIPE	1	
S1	Z-5-87813-225-0	SET,GASKET	1	A INC.2,9,17 & etc. -1995.2
-	Z-5-87812-637-2	SET,GASKET	1	A,C,D INC.2,9,17 & etc. 1995.3-
-	Z-5-87813-227-0	SET,GASKET	1	B INC.2,9,17 & etc. -1995.2
-	Z-5-87812-638-2	SET,GASKET	1	B INC.2,9,17 & etc. 1995.3-
-	Z-5-87813-226-0	SET,GASKET	1	C,D INC.2,9,17 & etc. -1995.2
-	Z-5-87813-517-0	SET,GASKET	1	E,G,H,J INC.2,9,17 & etc.
-	Z-5-87813-518-0	SET,GASKET	1	F INC.2,9,17 & etc.
2	Z-5-09623-002-0	* O-RING	1	
3	Z-8-97043-741-1	PIPE	1	
4	Z-0-2808-0620-0	BOLT	4	
5	Z-0-5004-0812-0	BOLT & WASHER	2	A,B,C,D,E,F -1998.5
-	Z-0-2808-0810-0	BOLT	2	1998.6-
6	Z-8-94177-189-3	VALVE	1	A,B,C,D -1996.3
-	Z-8-97145-612-0	VALVE	1	1996.4-
7	Z-8-97113-336-1	PIPE	1	
8	Z-8-09675-032-1	BOLT	1	
9	Z-9-0957-2008-0	* PACKING	5	
10	Z-0-5004-0820-0	BOLT	1	
11	Z-9-0916-4708-0	WASHER	1	
12	Z-8-94327-564-1	PIPE	1	A,B,C,D -1996.8
-	Z-8-97139-713-0	PIPE	1	1996.9-
13	Z-8-94171-944-0	BOLT	2	
14	Z-8-94130-021-1	NIPPLE	1	
15	Z-5-09675-018-1	BOLT,EYE	1	

F-6 OIL PIPE

A :4JG2PJ
B :4JG2PJ-01
C :4JG2PJ-02
D :4JG2PJ-03
E :4JG2PJ-04
F :4JG2PJ-05
G :4JG2PJ-07
H :4JG2PJ-08
J :4JG2PJ-09

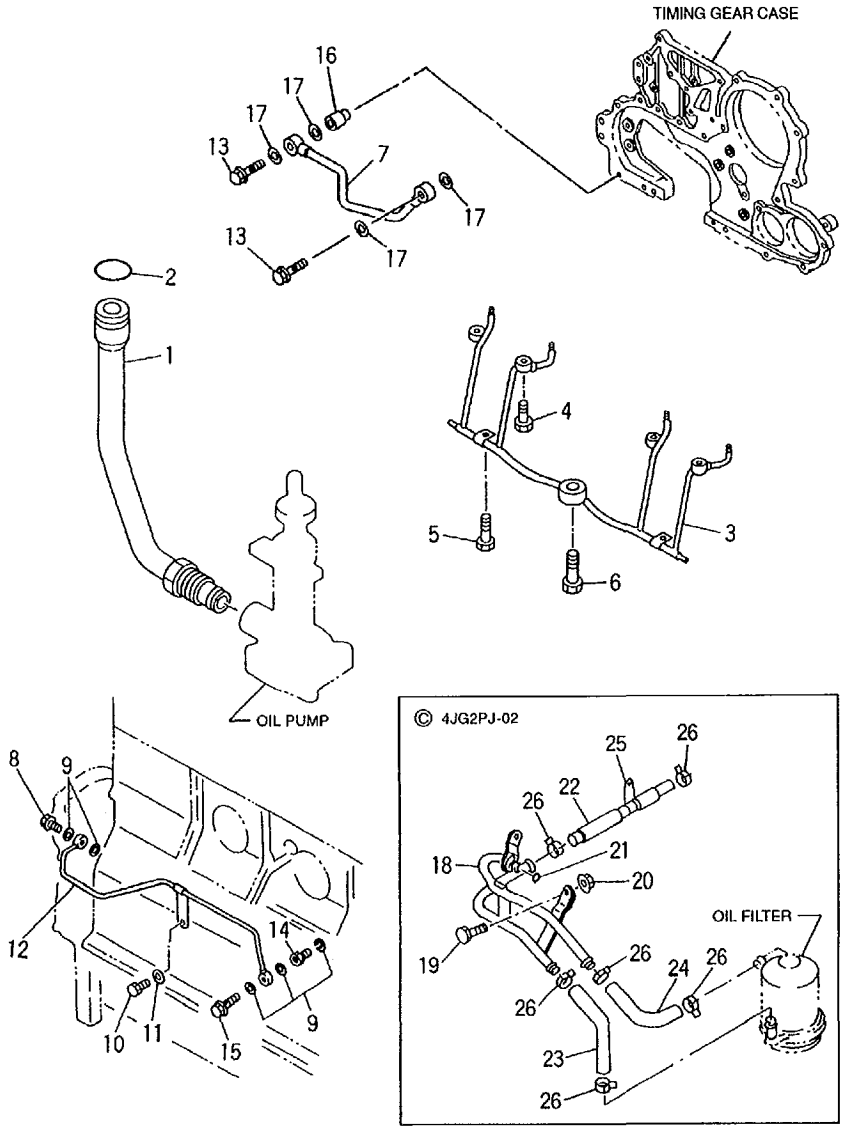

No.	Part No.	Description	Req'd	Remarks・Serial No.
16	Z-8-97113-337-0	ADAPTER	1	A
				-1994.9
-	Z-8-97123-295-0	CONNECTOR	1	1994.10-
17	Z-9-0957-1408-0	* PACKING	4	
18	Z-8-97115-640-0	PIPE	1	C
19	Z-0-5014-0816-0	BOLT & WASHER	1	C
				-1998.5
-	Z-0-2808-0812-0	BOLT	1	C
				1998.6-
20	Z-9-0911-0508-0	NUT	1	C
21	Z-9-0956-1218-0	O-RING	1	C
22	Z-8-94362-879-0	HOSE	1	C
23	Z-0-0326-6300-0	HOSE	1	C
24	Z-8-94442-162-1	HOSE	1	C
25	Z-8-94332-786-0	CLIP	1	C
26	Z-8-94413-822-0	CLIP	6	C

G-2 COOLING SYSTEM

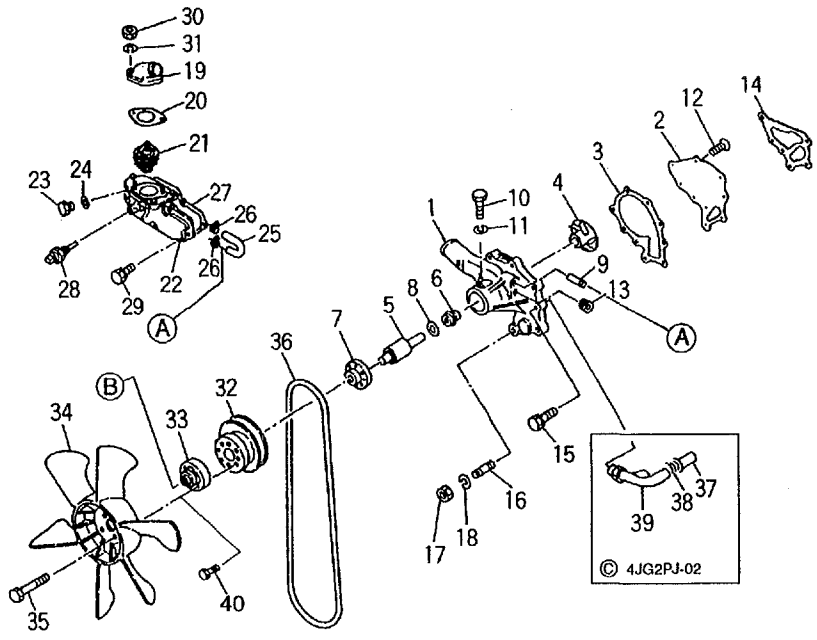

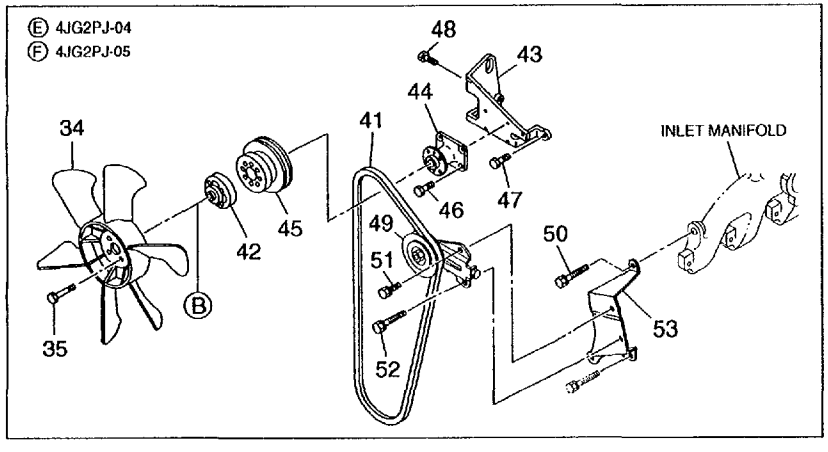

A :4JG2PJ B :4JG2PJ-01 C :4JG2PJ-02 D :4JG2PJ-03 E :4JG2PJ-04 F :4JG2PJ-05 G :4JG2PJ-07 H :4JG2PJ-08 J :4JG2PJ-09

No.	Part No.	Description	Req'd	Remarks・Serial No.
A	Z-8-97028-590-0	WATER PUMP ASSY	1	INC.1-14
1	NO PART NO.	BODY	1	
K	Z-8-97028-597-0	KIT,REPAIR	1	INC.2-6,8,14
2	Z-8-94170-127-0	* COVER	1	
3	Z-8-94170-128-0	* PACKING	1	
4	Z-8-94114-727-0	* WHEEL,IMPELLER	1	
5	Z-8-94110-560-0	* BEARING,BALL	1	
6	Z-8-94422-326-0	* UNIT,SEAL	1	
7	Z-5-13642-064-0	CENTER,FAN	1	
8	Z-9-13639-001-0	* THROWER	1	
9	Z-8-94111-615-0	JOINT	1	
10	Z-9-09814-014-1	SET,SCREW	1	
11	Z-9-0915-0508-0	WASHER	1	
12	Z-9-0306-5816-0	SCREW	3	
13	Z-5-09605-005-0	PLUG,HEATER	1	
S1	Z-5-87813-225-0	SET,GASKET	1	A INC.14,20 & etc. -1995.2
-	Z-5-87812-637-2	SET,GASKET	1	A,C,D INC.14,20 & etc. 1995.3-
-	Z-5-87813-227-0	SET,GASKET	1	B INC.14,20 & etc. -1995.2
-	Z-5-87812-638-2	SET,GASKET	1	B INC.14,20 & etc. 1995.3-
-	Z-5-87813-226-0	SET,GASKET	1	C,D INC.14,20 & etc. -1995.2
-	Z-5-87813-517-0	SET,GASKET	1	E,G,H,J INC.14,20 & etc
-	Z-5-87813-518-0	SET,GASKET	1	F INC.14,20 & etc
14	Z-8-97095-512-0	* PACKING	1	
15	Z-8-94205-986-1	BOLT	2	A,B,C,D,E,F -1998.5
-	Z-0-2808-0860-0	BOLT	2	1998.6-
-	Z-0-5004-0840-0	BOLT & WASHER	1	A,B,C,D,E,F -1998.5

G-3 COOLING SYSTEM

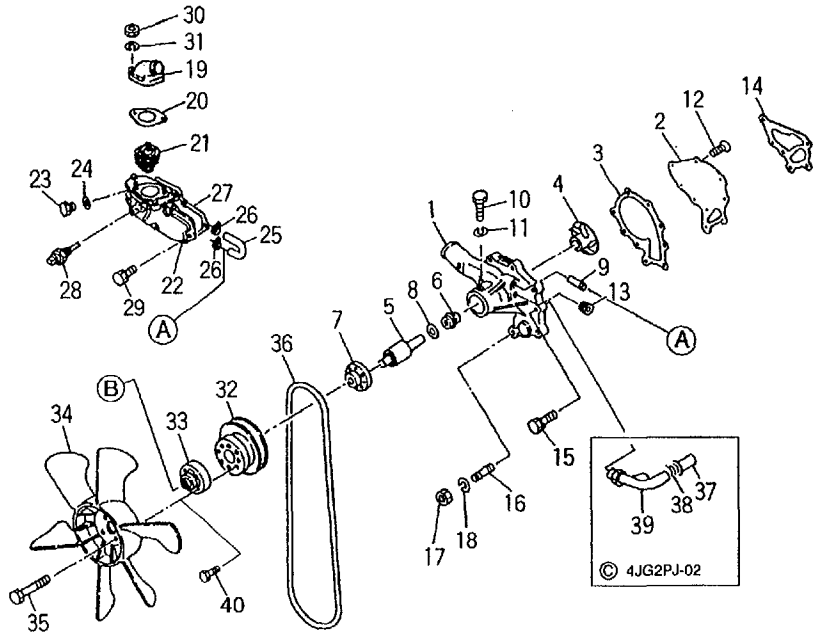

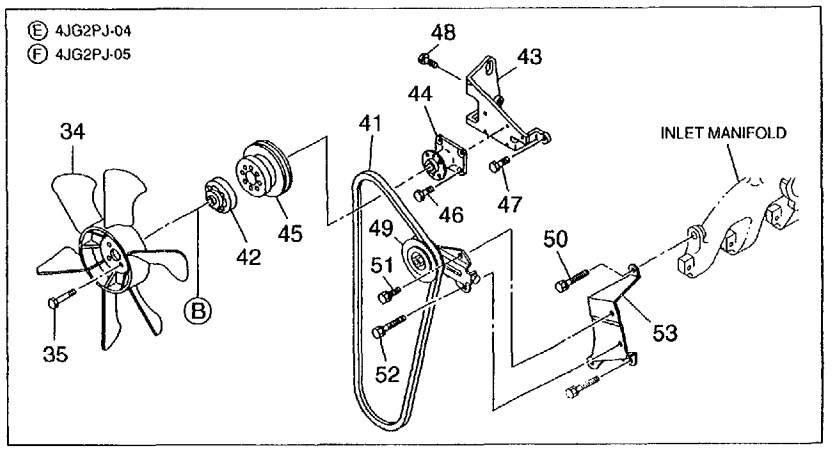

A :4JG2PJ
B :4JG2PJ-01
C :4JG2PJ-02
D :4JG2PJ-03
E :4JG2PJ-04
F :4JG2PJ-05
G :4JG2PJ-07
H :4JG2PJ-08
J :4JG2PJ-09

No.	Part No.	Description	Req'd	Remarks • Serial No.
15	Z-0-2868-0840-0	BOLT	1	1998.6-
16	Z-9-0411-0840-0	STUD	3	
17	Z-9-0911-0408-0	NUT	3	
18	Z-9-0915-0508-0	WASHER	3	
19	Z-8-94152-595-0	PIPE	1	
20	Z-8-94365-674-1	* PACKING	1	
21	Z-8-94382-546-0	THERMOSTAT	1	
22	Z-8-97018-664-0	HOUSING	1	
23	Z-5-09605-005-0	+ PLUG,HEATER	1	
-	Z-9-09661-005-0	PLUG	1	
24	Z-9-0957-1316-0	GASKET	1	
25	Z-8-94328-832-0	HOSE	1	
26	Z-8-94413-822-0	CLIP	2	
27	Z-8-97090-879-0	PACKING	1	
28	Z-8-97069-786-1	SWITCH,THERMO	1	
29	Z-0-5004-0820-0	BOLT & WASHER	3	A,B,C,D,E,F -1998.5
-	Z-0-2808-0816-0	BOLT	3	1998.6-
-	Z-0-5004-0835-0	BOLT & WASHER	2	A,B,C,D,E,F -1998.5
-	Z-0-2868-0835-0	BOLT	2	1998.6-
30	Z-9-0911-0508-0	NUT	2	
31	Z-9-0915-0508-0	WASHER	2	
32	Z-8-94149-359-1	PULLEY	1	A,B,C,G,H,J
-	Z-8-97036-956-0	PULLEY	1	D,E,F
-	Z-8-97036-956-0	PULLEY	1	C(EPA):FHD36Z2 FHD36Z2
33	Z-9-13642-076-1	SPACER	1	A,B,D,G,H,J
-	Z-9-89136-423-0	SPACER	1	C
-	Z-9-13642-078-0	SPACER	1	E,F
34	Z-8-94470-553-0	FAN	1	A,B,D,E,F,G,H,J
-	Z-8-94483-894-0	FAN	1	C
35	Z-0-5004-0820-0	BOLT	4	A,B,D,G,H,J
-	Z-0-5004-0835-0	BOLT	4	C
-	Z-0-5004-0850-0	BOLT	4	E,F
36	Z-1-13671-217-0	BELT	1	A,B,C,D -1995.7
-	Z-1-13671-208-0	BELT	1	1995.8-
-	Z-1-13671-208-0	BELT	1	C(GE)
37	Z-8-94365-381-0	CAP	1	C

G-4 COOLING SYSTEM

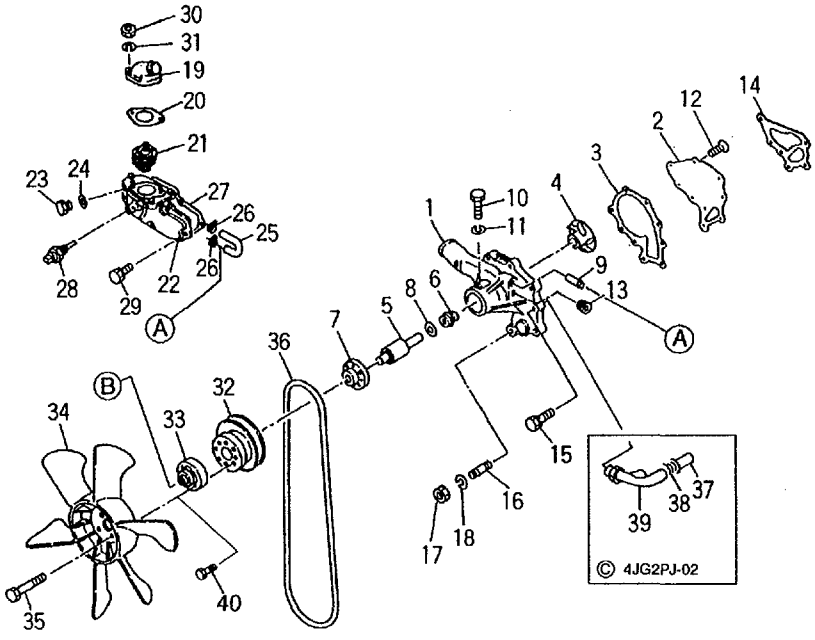

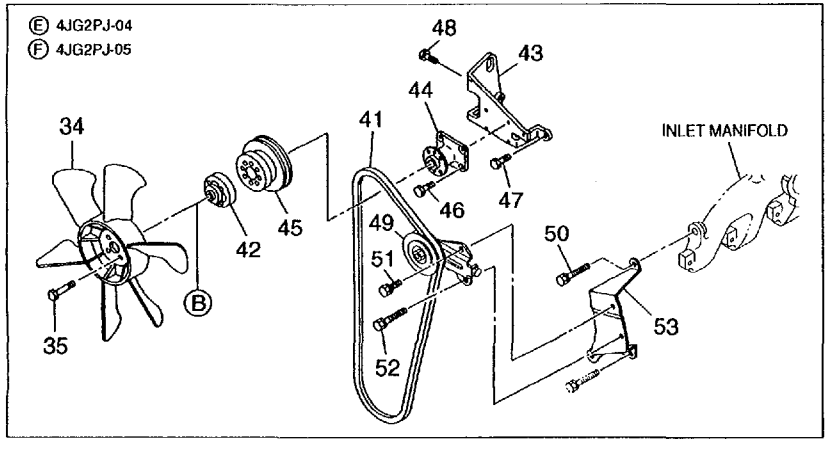

A :4JG2PJ
B :4JG2PJ-01
C :4JG2PJ-02
D :4JG2PJ-03
E :4JG2PJ-04
F :4JG2PJ-05
G :4JG2PJ-07
H :4JG2PJ-08
J :4JG2PJ-09

No.	Part No.	Description	Req'd	Remarks・Serial No.
38	Z-9-09915-642-2	CLIP	1	C
39	Z-8-94366-848-0	PIPE	1	C
40	Z-0-5004-0812-0	BOLT & WASHER	4	E,F -1998.10
-	Z-0-5004-0816-0	BOLT & WASHER	4	E,F 1998.11-
41	Z-8-94440-010-0	BELT	1	E,F
42	Z-8-97063-400-3	SPACER	2	E,F
43	Z-8-97182-472-0	BRACKET	1	E,F
44	Z-8-97182-224-0	CENTER	1	E,F
45	Z-5-13641-042-4	PULLEY	1	E,F
46	Z-0-2808-0620-0	BOLT	4	E,F
47	Z-0-2808-1020-0	BOLT	1	E,F
48	Z-0-2808-1035-0	BOLT	2	E,F
49	Z-8-97080-948-0	PULLEY	1	E,F
50	Z-0-2868-0820-0	BOLT	1	E,F
51	Z-0-2868-1025-0	BOLT	1	E,F
52	Z-0-2868-1030-0	BOLT	1	E,F
53	Z-8-97182-407-0	BRACKET	1	E,F

H-2 FUEL SYSTEM

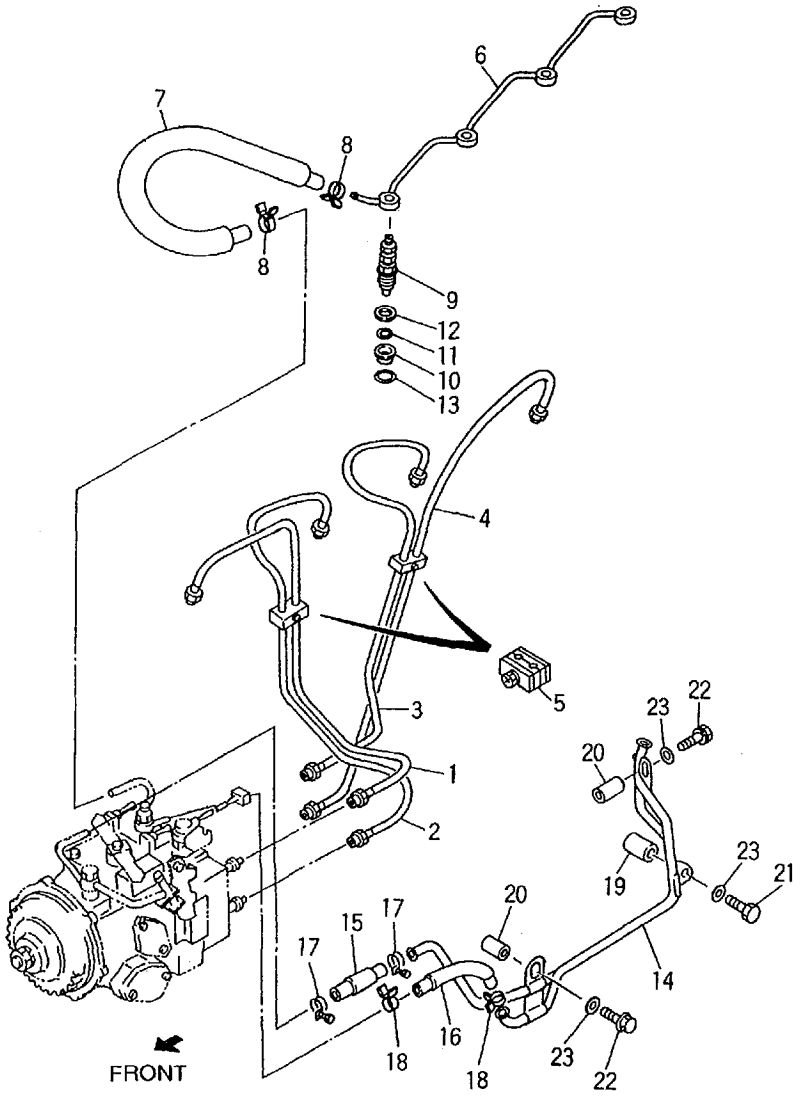

A :4JG2PJ
B :4JG2PJ-01
C :4JG2PJ-02
D :4JG2PJ-03
E :4JG2PJ-04
F :4JG2PJ-05
G :4JG2PJ-07
H :4JG2PJ-08
J :4JG2PJ-09

No.	Part No.	Description	Req'd	Remarks・Serial No.
1	Z-8-97101-873-2	PIPE,NO.1	1	
2	Z-8-97094-692-2	PIPE,NO.2	1	
3	Z-8-97094-693-2	PIPE,NO.3	1	
4	Z-8-97094-690-2	PIPE,NO.4	1	
5	Z-5-15419-013-1	CLIP	2	
6	Z-8-94368-249-2	PIPE	1	
7	Z-8-97129-413-0	HOSE	1	
8	Z-8-94238-610-0	CLIP	2	
9	Z-8-97079-653-0	NOZZLE	4	A,B,C,D -1996.2 SEE LOC.H-4
-	Z-8-97140-624-0	NOZZLE	4	1996.3- SEE LOC.H-4
S1	Z-5-87813-225-0	SET,GASKET	1	A INC.10-13 & etc. -1995.2
-	Z-5-87812-637-2	SET,GASKET	1	A,C,D INC.10-13 & etc. 1995.3-
-	Z-5-87813-227-0	SET,GASKET	1	B INC.10-13 & etc. -1995.2
-	Z-5-87812-638-2	SET,GASKET	1	B INC.10-13 & etc. 1995.3-
-	Z-5-87813-226-0	SET,GASKET	1	C,D INC.10-13 & etc. -1995.2
-	Z-5-87813-517-0	SET,GASKET	1	E,G,H,J INC.10-13 & etc.
-	Z-5-87813-518-0	SET,GASKET	1	F INC.10-13 & etc.
10	Z-8-94416-370-1	* SHIELD	4	A,B,C,D -1995.9
-	Z-8-97139-711-0	* SHIELD	4	1995.10-
11	Z-8-94420-247-0	* WASHER	4	
12	Z-8-94148-392-2	* WASHER	4	A,B,C,D -1995.9
-	Z-8-97139-710-0	* WASHER	4	1995.10-
13	Z-8-94257-593-0	* GASKET	4	

H-3 FUEL SYSTEM

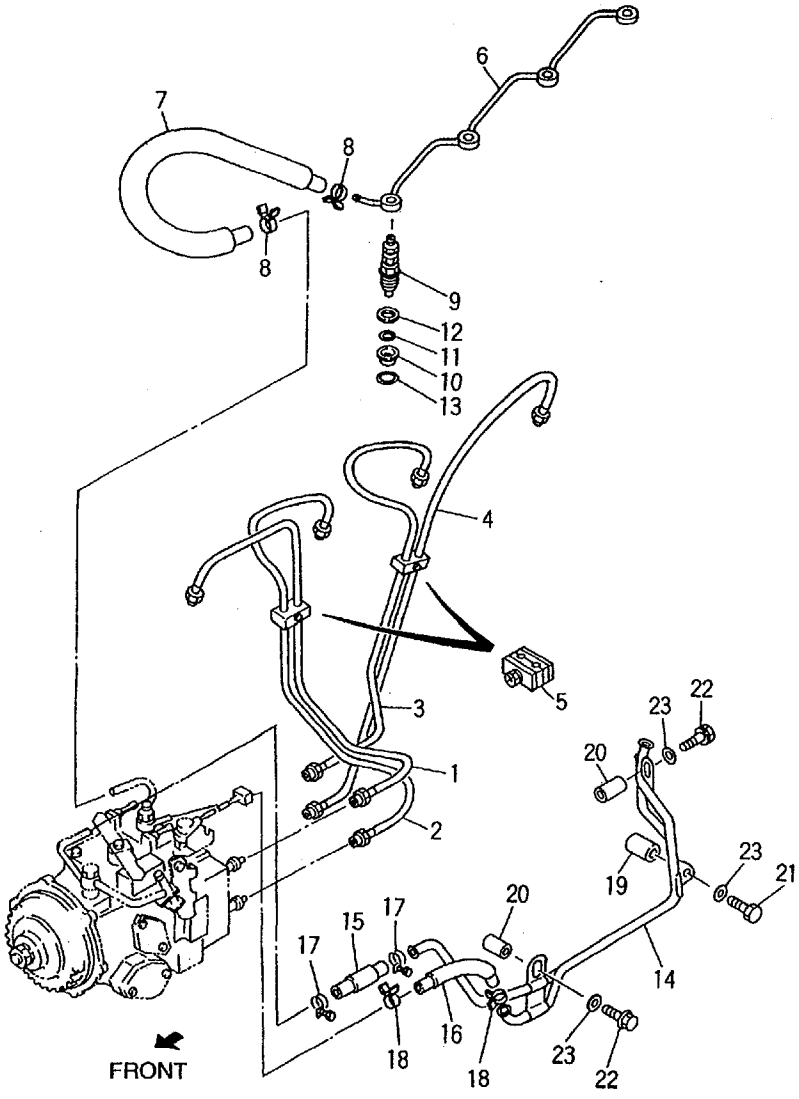

A :4JG2PJ
B :4JG2PJ-01
C :4JG2PJ-02
D :4JG2PJ-03
E :4JG2PJ-04
F :4JG2PJ-05
G :4JG2PJ-07
H :4JG2PJ-08
J :4JG2PJ-09

No.	Part No.	Description	Req'd	Remarks • Serial No.
14	Z-8-97107-957-1	PIPE	1	A -1994.11
-	Z-8-97123-050-0	PIPE	1	A,B,C,D,E,F 1994.12-1998.8
-	Z-8-97123-310-0	PIPE	1	1998.9-
15	Z-8-97114-225-0	HOSE	1	A -1994.8
-	Z-8-94152-989-1	HOSE	1	A 1994.9-1994.11
-	Z-8-97123-885-0	HOSE	1	A 1994.12
-	Z-8-97129-412-0	HOSE	1	A,B,C,D,E,F 1995.1-1998.8
-	Z-8-97213-796-0	HOSE	1	1998.9-
16	Z-8-97109-920-0	HOSE	1	A -1994.11
-	Z-8-97123-886-0	HOSE	1	A,B,C,D,E,F 1994.12-1998.8
-	Z-8-97123-795-0	HOSE	1	1998.9-
17	Z-1-09704-018-1	CLIP	2	A -1994.8
-	Z-8-94370-942-1	CLIP	2	1994.9-
18	Z-8-94238-610-0	CLIP	2	
19	Z-5-15419-036-0	SPACER	1	A
	Z-5-15419-036-0	SPACER		-1994.11
-	Z-5-15419-036-0	SPACER	2	1994.12-
20	Z-8-94225-562-0	TUBE,DISTANCE	2	A -1994.11
-	Z-8-94225-562-0	TUBE,DISTANCE	1	1994.12-
21	Z-0-5004-0860-0	BOLT & WASHER	1	A -1994.11
-	Z-0-5004-0860-0	BOLT & WASHER	2	1994.12-
22	Z-0-5004-0840-0	BOLT	2	A -1994.11
-	Z-0-5004-0840-0	BOLT	1	1994.12-
23	Z-9-0916-4808-0	WASHER	3	

H-4 INJECTION NOZZLE

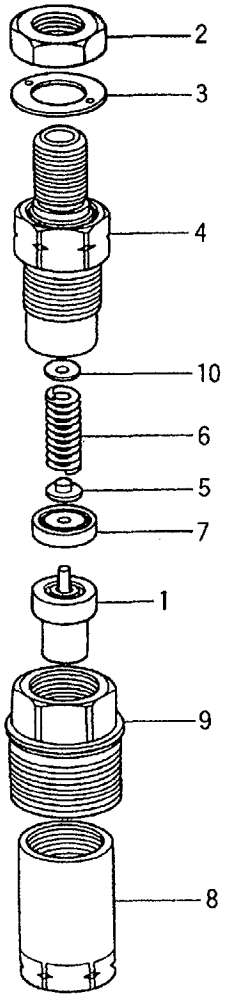

A :4JG2PJ
B :4JG2PJ-01
C :4JG2PJ-02
D :4JG2PJ-03
E :4JG2PJ-04
F :4JG2PJ-05
G :4JG2PJ-07
H :4JG2PJ-08
J :4JG2PJ-09

No.	Part No.	Description	Req'd	Remarks・Serial No.
A1	Z-8-97079-653-0	INJECTION NOZZLE ASSY	4	A,B,C,D INC.1-10 -1996.2
-	Z-8-97140-624-0	INJECTION NOZZLE ASSY	4	INC.1-10 1996.3-
1	Z-8-97107-444-0	NOZZLE	4	
2	Z-8-94174-344-0	NUT	4	
S1	Z-5-87813-225-0	SET,GASKET	1	A INC.3 & etc. -1995.2
-	Z-5-87812-637-2	SET,GASKET	1	A,C,D INC.3 & etc. 1995.3-
-	Z-5-87813-227-0	SET,GASKET	1	B INC.3 & etc. -1995.2
-	Z-5-87812-638-2	SET,GASKET	1	B INC.3 & etc. 1995.3-
-	Z-5-87813-226-0	SET,GASKET	1	C,D INC.3 & etc. -1995.2
-	Z-5-87813-517-0	SET,GASKET	1	E,G,H,J INC.3 & etc.
-	Z-5-87813-518-0	SET,GASKET	1	F INC.3 & etc.
3	Z-8-94104-993-0	* GASKET	4	
4	Z-8-97107-547-0	HOLDER	4	A,B,C,D,E,F INC.5-10 -1996.2
-	Z-8-97141-769-0	HOLDER	4	INC.5-10 1996.3-
5	Z-8-94128-963-0	SEAT	4	
6	Z-8-94128-964-0	SPRING	4	
7	Z-8-97083-358-0	SPACER	4	
8	Z-8-94482-217-0	NUT	4	A,B,C,D -1995.9
-	Z-8-97086-142-0	NUT	4	1995.10-
9	Z-8-94424-217-0	SCREW	4	A,B,C,D -1995.9

H-5 INJECTION NOZZLE

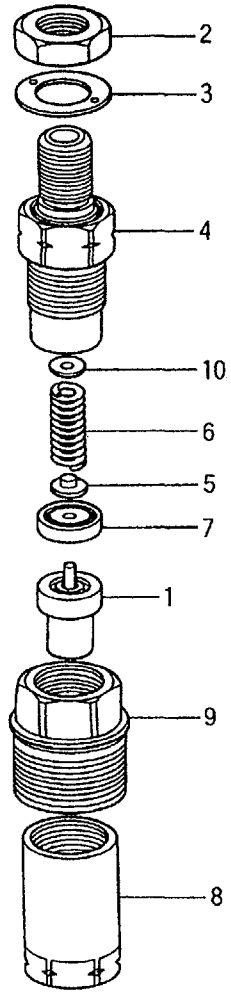

A :4JG2PJ
B :4JG2PJ-01
C :4JG2PJ-02
D :4JG2PJ-03
E :4JG2PJ-04
F :4JG2PJ-05
G :4JG2PJ-07
H :4JG2PJ-08
J :4JG2PJ-09

No.	Part No.	Description	Req'd	Remarks・Serial No.
10	Z-8-94176-962-0	SHIM	AR	t=0.10mm
-	Z-8-94176-963-0	SHIM	AR	t=0.20mm
-	Z-8-94176-964-0	SHIM	AR	t=0.30mm
-	Z-8-94176-965-0	SHIM	AR	t=0.40mm
-	Z-8-94176-966-0	SHIM	AR	t=0.50mm
-	Z-8-94176-967-0	SHIM	AR	t=0.52mm
-	Z-8-94176-968-0	SHIM	AR	t=0.54mm
-	Z-8-94176-969-0	SHIM	AR	t=0.56mm
-	Z-8-94176-970-0	SHIM	AR	t=0.58mm
-	Z-8-94176-971-0	SHIM	AR	t=0.80mm

H-6 INJECTION PUMP(FITTING PARTS)

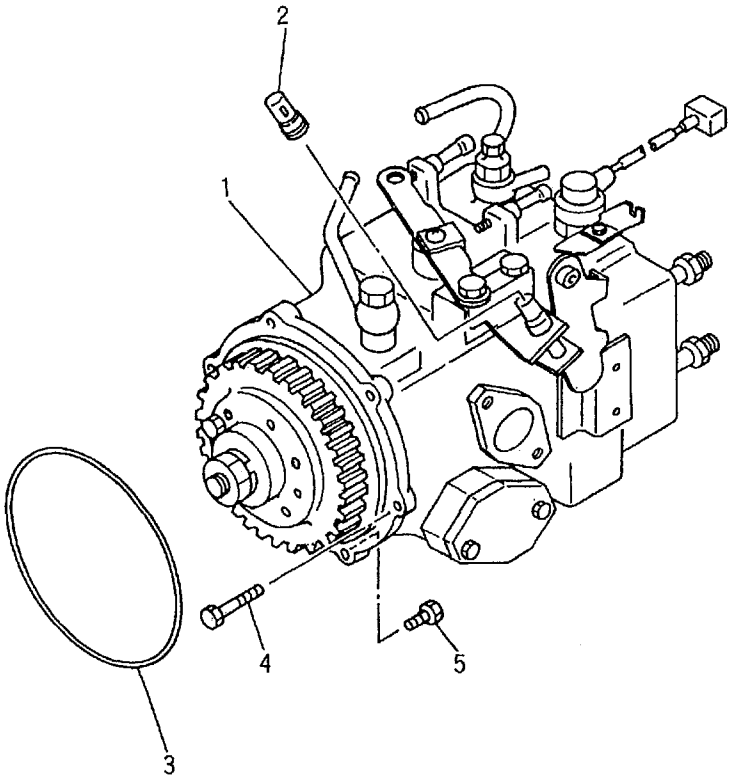

A :4JG2PJ
B :4JG2PJ-01
C :4JG2PJ-02
D :4JG2PJ-03
E :4JG2PJ-04
F :4JG2PJ-05
G :4JG2PJ-07
H :4JG2PJ-08
J :4JG2PJ-09

No.	Part No.	Description	Req'd	Remarks・Serial No.
1	Z-8-97090-633-0	PUMP,INJECTION	1	A -1995.2 SEE LOC.H-8
-	Z-8-97125-290-0	PUMP,INJECTION	1	A,B,C,D 1995.3-1995.7 SEE LOC.H-8
-	Z-8-97136-680-0	PUMP,INJECTION	1	A,B,E,F,G 1995.8- SEE LOC.H-8
-	Z-8-97136-680-0	PUMP,INJECTION	1	C,D 1995.8-1997.12 SEE LOC.H-8
-	Z-8-97190-367-0	PUMP,INJECTION	1	C,D,H,J 1998.1- SEE LOC.H-8
2	NO PART NO.	CAP	1	A
S1	Z-5-87813-225-0	SET,GASKET	1	A INC.3 & etc. -1995.2
-	Z-5-87812-637-2	SET,GASKET	1	A,C,D INC.3 & etc. 1995.3-
-	Z-5-87813-227-0	SET,GASKET	1	B INC.3 & etc. -1995.2
-	Z-5-87812-638-2	SET,GASKET	1	B INC.3 & etc. 1995.3-
-	Z-5-87813-226-0	SET,GASKET	1	C,D INC.3 & etc. -1995.2
-	Z-5-87813-517-0	SET,GASKET	1	E,G,H,J INC.3 & etc.
-	Z-5-87813-518-0	SET,GASKET	1	F INC.3 & etc.
3	Z-8-94109-707-0	* PACKING	1	
4	Z-0-5004-0860-0	BOLT & WASHER	4	A,B,C,D -1998.5
-	Z-0-2808-0860-0	BOLT	4	A,B,C,D,G,H,J 1998.6-

H-7 INJECTION PUMP(FITTING PARTS)

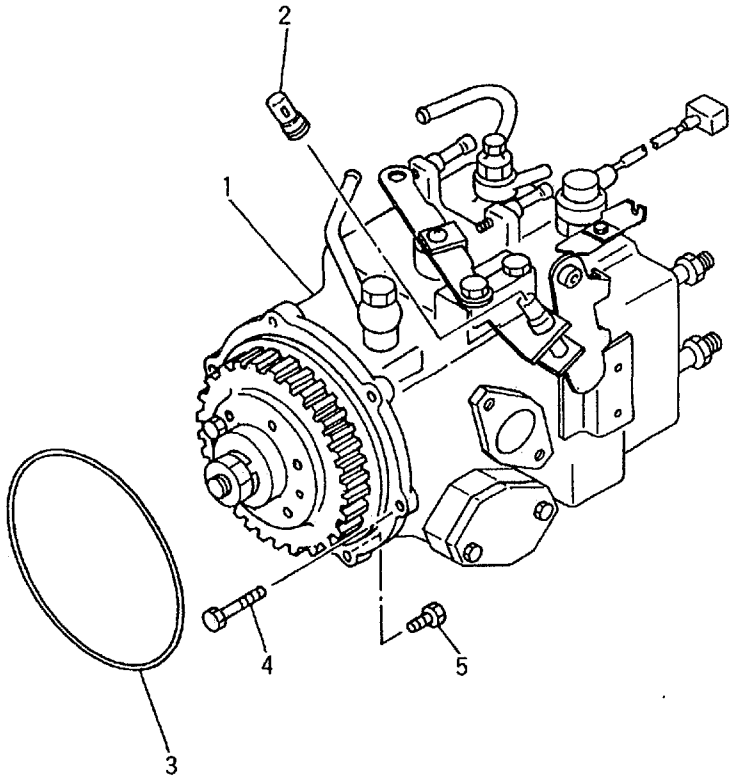

A :4JG2PJ
B :4JG2PJ-01
C :4JG2PJ-02
D :4JG2PJ-03
E :4JG2PJ-04
F :4JG2PJ-05
G :4JG2PJ-07
H :4JG2PJ-08
J :4JG2PJ-09

No.	Part No.	Description	Req'd	Remarks・Serial No.
4	Z-5-09030-013-1	BOLT	1	A,B,C,D,E,F -1998.5
-	Z-0-2808-0870-0	BOLT	1	1998.6-
-	Z-0-5004-0860-0	BOLT & WASHER	2	E,F -1998.5
-	Z-0-2808-0860-0	BOLT	2	E,F 1998.6-
-	Z-0-5004-0870-0	BOLT & WASHER	2	E,F -1998.5
-	Z-0-2808-0870-0	BOLT	2	E,F 1998.6-
5	Z-0-5004-0825-0	BOLT & WASHER	1	A,B,C,D,E,F -1998.5
-	Z-0-2868-0825-0	BOLT	1	1998.6-

H-8 INJECTION PUMP(INNER PARTS)(1/2)

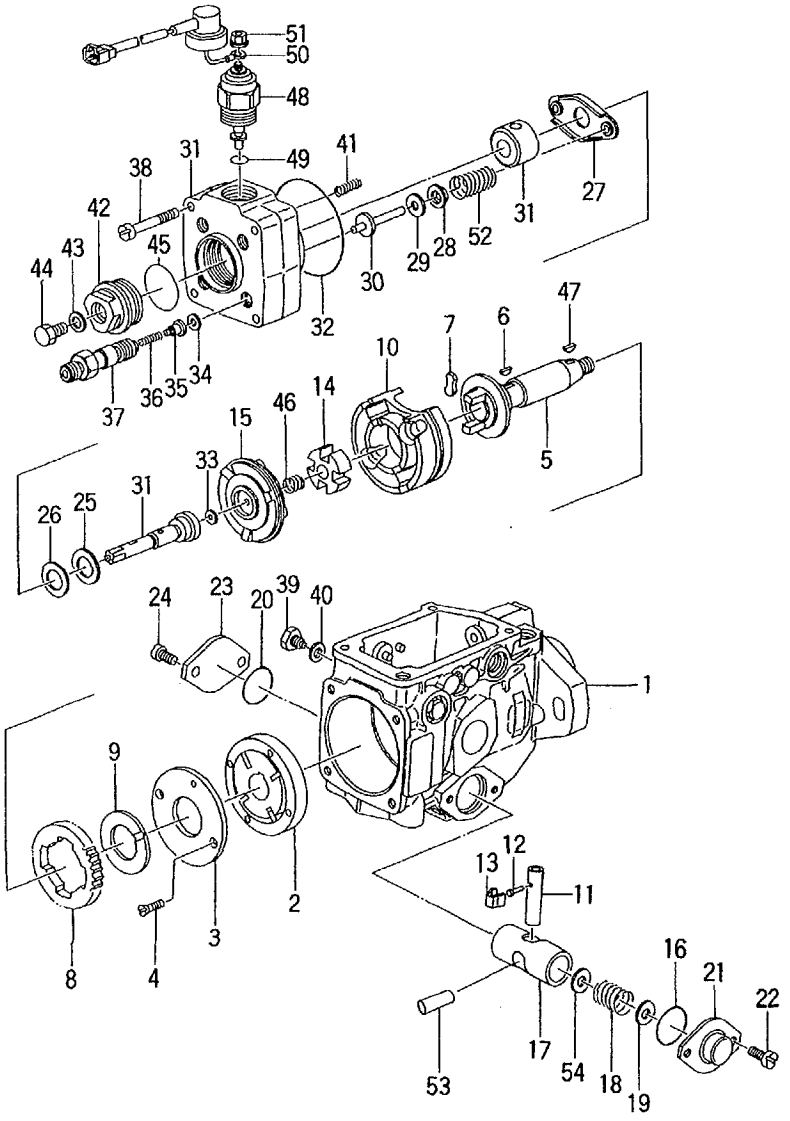

A :4JG2PJ
B :4JG2PJ-01
C :4JG2PJ-02
D :4JG2PJ-03
E :4JG2PJ-04
F :4JG2PJ-05
G :4JG2PJ-07
H :4JG2PJ-08
J :4JG2PJ-09

No.	Part No.	Description	Req'd	Remarks • Serial No.
A1	Z-8-97090-633-0	INJECTION PUMP ASSY	1	A INC.1-54 & LOC.H-13 -1995.2
-	Z-8-97125-290-0	INJECTION PUMP ASSY	1	A,B INC.1-54 & LOC.H-13 1995.3-1995.7
-	Z-8-97136-680-0	INJECTION PUMP ASSY	1	A,B,E,F,G INC.1-54 & LOC.H-13 1995.8-
A2	Z-8-97125-290-0	INJECTION PUMP ASSY	1	C,D INC.1-54 & LOC.H-13 1995.3-1995.7
-	Z-8-97136-680-0	INJECTION PUMP ASSY	1	C,D INC.1-54 & LOC.H-13 1995.8-1997.12
-	Z-8-97190-367-0	INJECTION PUMP ASSY	1	C,D,H,J INC.1-54 & LOC.H-13 1998.1-
1	Z-8-94445-579-0	HOUSING	1	
2	Z-8-94227-477-0	PUMP,FEED	1	
3	Z-8-94227-478-0	COVER	1	
4	Z-8-94227-479-0	SCREW	2	
5	Z-8-94227-480-0	SHAFT,DRIVE	1	
6	Z-8-94227-481-0	KEY	1	
7	Z-8-94227-482-1	DAMPER	2	A -1995.2
-	Z-8-94169-528-0	DAMPER	2	1995.3-
8	Z-8-94227-483-0	GEAR	1	
9	Z-8-94227-484-0	WASHER	1	
10	Z-8-94227-485-0	ROLLER	1	A,B,E,F,G
-	Z-8-94227-485-0	ROLLER	1	C,D -1997.12
-	Z-8-94433-760-0	ROLLER	1	C,D,H,J 1998.1-
11	Z-8-94227-486-0	PIN	1	
12	Z-8-94227-487-0	PIN	1	
13	Z-8-94227-488-0	CLIP	1	
14	Z-8-94227-489-0	DISC	1	
15	Z-8-94229-157-0	DISC,CAM	1	
K	Z-8-94228-545-0	KIT,REPAIR	1	INC.16,20,32,34,43,45 & etc.

H-9 INJECTION PUMP(INNER PARTS)(1/2)

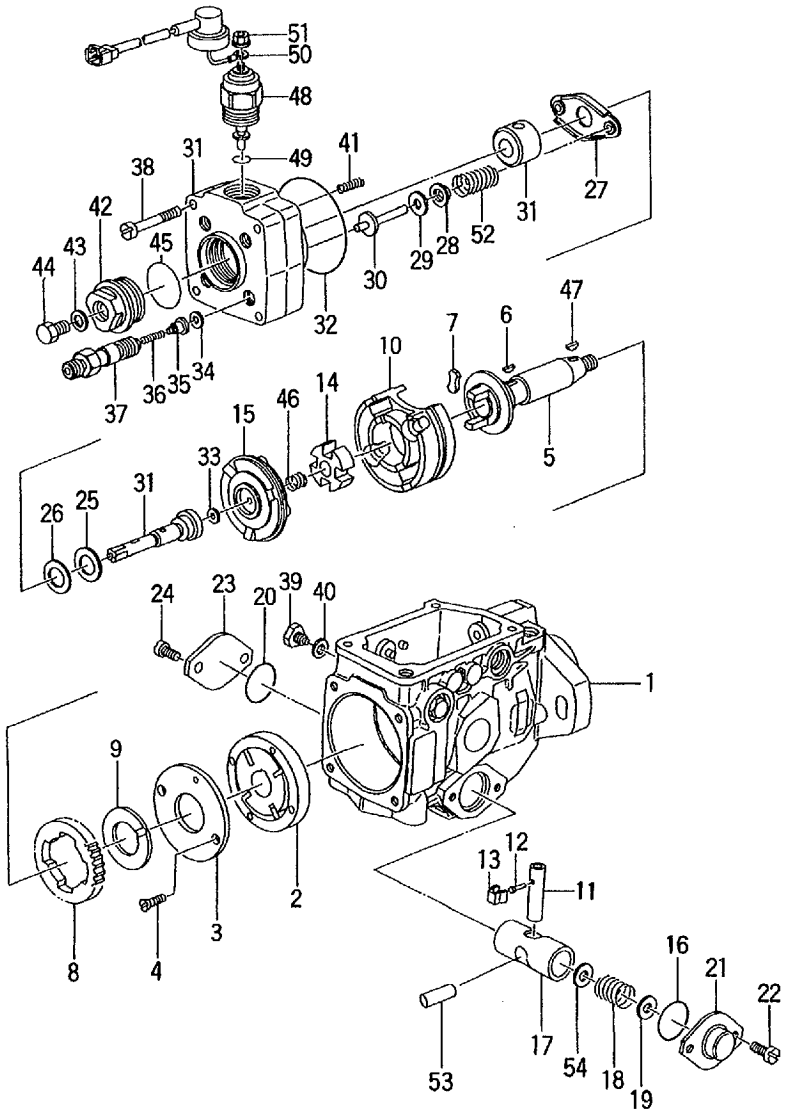

A :4JG2PJ
B :4JG2PJ-01
C :4JG2PJ-02
D :4JG2PJ-03
E :4JG2PJ-04
F :4JG2PJ-05
G :4JG2PJ-07
H :4JG2PJ-08
J :4JG2PJ-09

No.	Part No.	Description	Req'd	Remarks・Serial No.
16	Z-8-94227-491-0	* O-RING	1	
17	Z-8-97119-345-0	PISTON	1	
18	Z-8-97028-567-1	SPRING	1	A,B,E,F,G
-	Z-8-94380-656-0	SPRING	1	A,B,E,F,G
-	Z-8-97028-567-1	SPRING	1	C,D -1997.12
-	Z-8-94380-656-0	SPRING	1	C,D -1997.12
-	Z-8-94386-591-0	SPRING	1	C,D,H,J 1998.1-
-	Z-8-97041-670-0	SPRING	1	C,D,H,J 1998.1-
-	Z-8-94313-200-0	SPRING	1	C,D,H,J 1998.1-
19	Z-8-94227-495-0	SHIM	AR	t=0.6mm
-	Z-8-94227-496-0	SHIM	AR	t=0.7mm
-	Z-8-94227-497-0	SHIM	AR	t=0.9mm
-	Z-8-94227-498-0	SHIM	AR	t=1.0mm
-	Z-8-94227-499-0	SHIM	AR	t=1.2mm
-	Z-8-94121-620-0	SHIM	AR	t=2.4mm
20	Z-8-94227-491-0	* O-RING	1	
21	Z-8-94473-120-0	COVER	1	
22	Z-8-94313-276-0	SCREW	2	
23	Z-8-94242-967-0	COVER	1	
24	Z-8-94313-276-0	SCREW	2	
25	Z-8-94227-514-0	SHIM	1	
26	Z-8-94227-515-0	WASHER	1	
27	Z-8-94227-516-1	SEAT	1	
28	Z-8-94227-517-0	SEAT,SPRING	2	
29	Z-8-94227-518-0	SHIM	AR	t=0.5mm
-	Z-8-94227-519-0	SHIM	AR	t=0.8mm
-	Z-8-94227-520-0	SHIM	AR	t=1.0mm
-	Z-8-94227-521-0	SHIM	AR	t=1.2mm
-	Z-8-94227-522-0	SHIM	AR	t=1.5mm
-	Z-8-94227-523-0	SHIM	AR	t=1.8mm
-	Z-8-94227-524-0	SHIM	AR	t=2.0mm
-	Z-8-94433-204-0	SHIM	AR	t=0.9mm
-	Z-8-94433-205-0	SHIM	AR	t=1.1mm
-	Z-8-94433-206-0	SHIM	AR	t=1.3mm
-	Z-8-94433-207-0	SHIM	AR	t=1.4mm

H-10 INJECTION PUMP(INNER PARTS)(1/2)

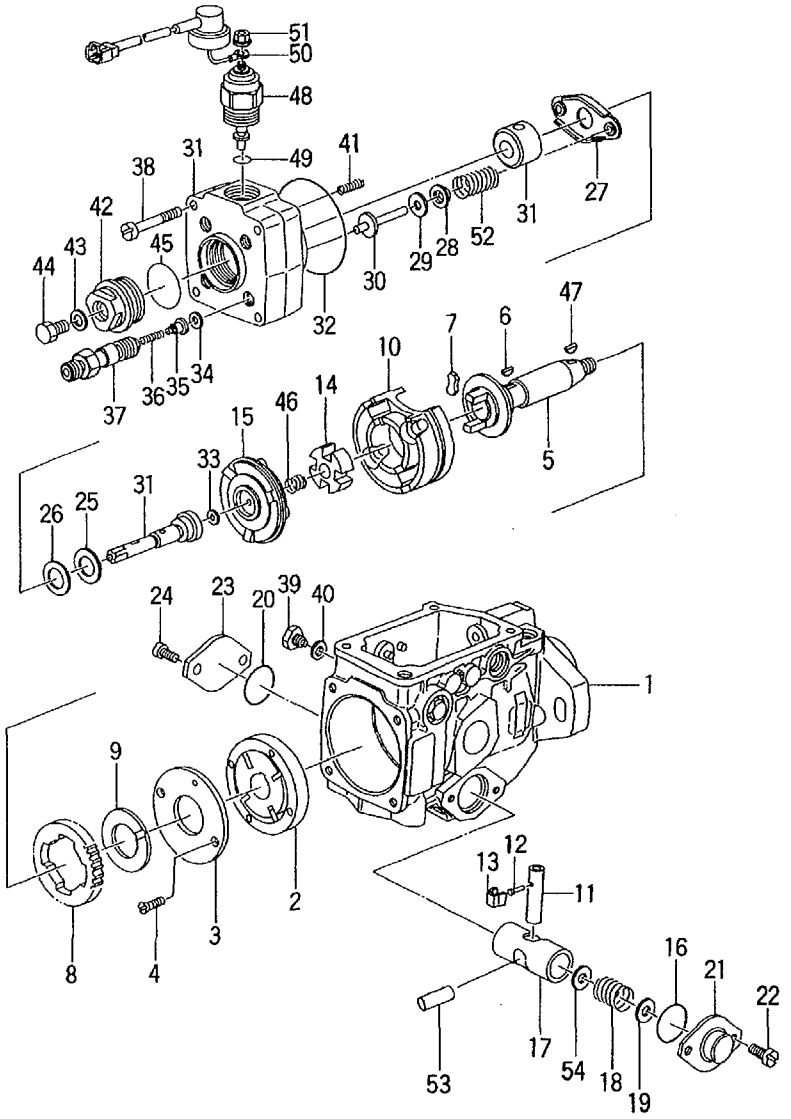

A :4JG2PJ B :4JG2PJ-01 C :4JG2PJ-02 D :4JG2PJ-03 E :4JG2PJ-04 F :4JG2PJ-05 G :4JG2PJ-07 H :4JG2PJ-08 J :4JG2PJ-09

No.	Part No.	Description	Req'd	Remarks・Serial No.
29	Z-8-94433-208-0	SHIM	AR	t=1.6mm
-	Z-8-94433-209-0	SHIM	AR	t=1.7mm
30	Z-8-94227-525-0	PIN,GUIDE	2	A,B,E,F,G
-	Z-8-94227-525-0	PIN,GUIDE	2	C,D -1997.12
-	Z-8-97214-365-0	PIN,GUIDE	2	C,D,H,J 1998.1-
31	Z-8-97102-536-0	DISTRIBUTOR	1	
32	Z-8-94227-527-0	* O-RING	1	
33	Z-8-94227-528-0	SHIM	AR	t=1.9mm
-	Z-8-94227-529-0	SHIM	AR	t=1.92mm
-	Z-8-94227-530-0	SHIM	AR	t=1.94mm
-	Z-8-94227-531-0	SHIM	AR	t=1.96mm
-	Z-8-94227-532-0	SHIM	AR	t=1.98mm
-	Z-8-94227-533-0	SHIM	AR	t=2.0mm
-	Z-8-94227-534-0	SHIM	AR	t=2.02mm
-	Z-8-94227-535-0	SHIM	AR	t=2.04mm
-	Z-8-94227-536-0	SHIM	AR	t=2.06mm
-	Z-8-94227-537-0	SHIM	AR	t=2.08mm
-	Z-8-94227-538-0	SHIM	AR	t=2.1mm
-	Z-8-94227-539-0	SHIM	AR	t=2.12mm
-	Z-8-94227-540-0	SHIM	AR	t=2.14mm
-	Z-8-94227-541-0	SHIM	AR	t=2.16mm
-	Z-8-94227-542-0	SHIM	AR	t=2.18mm
-	Z-8-94227-543-0	SHIM	AR	t=2.2mm
-	Z-8-94227-544-0	SHIM	AR	t=2.22mm
-	Z-8-94227-545-0	SHIM	AR	t=2.24mm
-	Z-8-94227-546-0	SHIM	AR	t=2.26mm
-	Z-8-94227-547-0	SHIM	AR	t=2.28mm
-	Z-8-94227-548-0	SHIM	AR	t=2.3mm
-	Z-8-94227-549-0	SHIM	AR	t=2.32mm
-	Z-8-94227-550-0	SHIM	AR	t=2.34mm
-	Z-8-94227-551-0	SHIM	AR	t=2.36mm
-	Z-8-94227-552-0	SHIM	AR	t=2.38mm
-	Z-8-94227-553-0	SHIM	AR	t=2.4mm
-	Z-8-94227-554-0	SHIM	AR	t=2.42mm
-	Z-8-94227-555-0	SHIM	AR	t=2.44mm
-	Z-8-94227-556-0	SHIM	AR	t=2.46mm
-	Z-8-94227-557-0	SHIM	AR	t=2.48mm
-	Z-8-94227-558-0	SHIM	AR	t=2.5mm

H-11 INJECTION PUMP(INNER PARTS)(1/2)

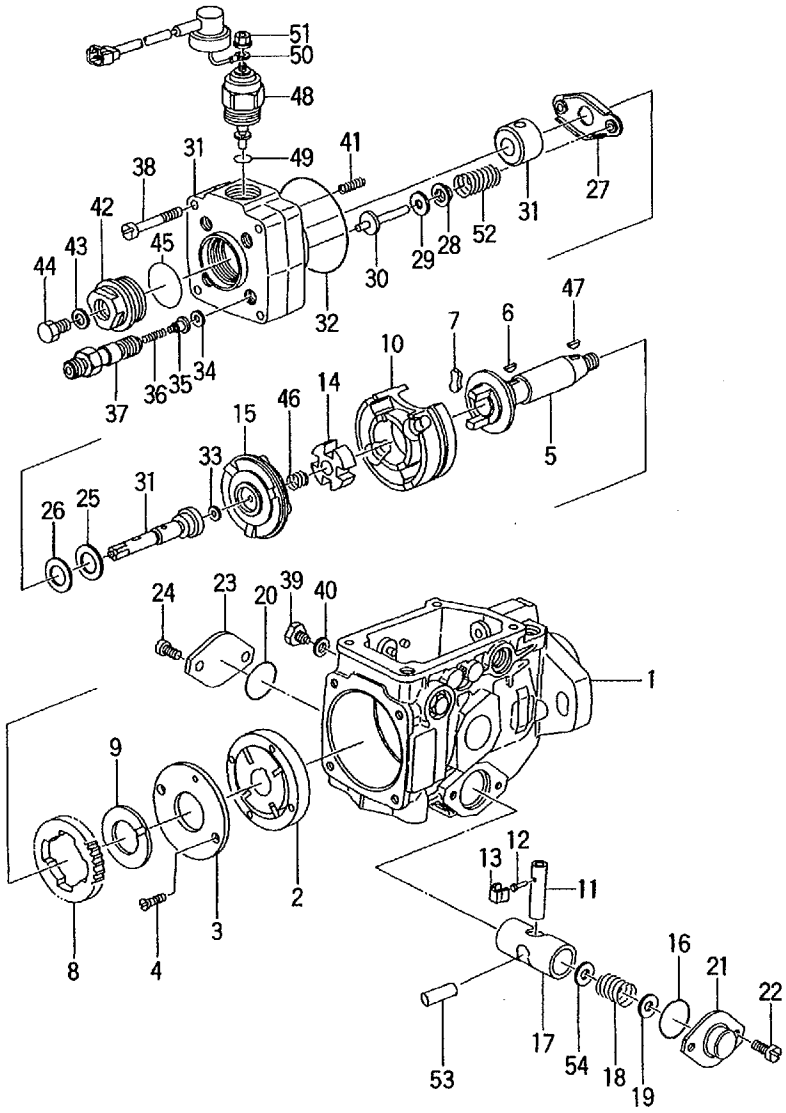

A :4JG2PJ
B :4JG2PJ-01
C :4JG2PJ-02
D :4JG2PJ-03
E :4JG2PJ-04
F :4JG2PJ-05
G :4JG2PJ-07
H :4JG2PJ-08
J :4JG2PJ-09

No.	Part No.	Description	Req'd	Remarks・Serial No.
33	Z-8-94227-559-0	SHIM	AR	t=2.52mm
-	Z-8-94227-560-0	SHIM	AR	t=2.54mm
-	Z-8-94227-561-0	SHIM	AR	t=2.56mm
-	Z-8-94227-562-0	SHIM	AR	t=2.58mm
-	Z-8-94227-563-0	SHIM	AR	t=2.6mm
-	Z-8-94227-564-0	SHIM	AR	t=2.62mm
-	Z-8-94227-565-0	SHIM	AR	t=2.64mm
-	Z-8-94227-566-0	SHIM	AR	t=2.66mm
-	Z-8-94227-567-0	SHIM	AR	t=2.68mm
-	Z-8-94227-568-0	SHIM	AR	t=2.7mm
-	Z-8-94227-569-0	SHIM	AR	t=2.72mm
-	Z-8-94227-570-0	SHIM	AR	t=2.74mm
-	Z-8-94227-571-0	SHIM	AR	t=2.76mm
-	Z-8-94227-572-0	SHIM	AR	t=2.78mm
-	Z-8-94227-573-0	SHIM	AR	t=2.8mm
-	Z-8-94227-574-0	SHIM	AR	t=2.82mm
-	Z-8-94227-575-0	SHIM	AR	t=2.84mm
-	Z-8-94227-576-0	SHIM	AR	t=2.86mm
-	Z-8-94227-577-0	SHIM	AR	t=2.88mm
-	Z-8-94227-578-0	SHIM	AR	t=2.9mm
-	Z-8-94111-658-0	SHIM	AR	t=1.74mm
-	Z-8-94111-659-0	SHIM	AR	t=1.76mm
-	Z-8-94111-660-0	SHIM	AR	t=1.78mm
-	Z-8-94111-661-0	SHIM	AR	t=1.8mm
-	Z-8-94111-662-0	SHIM	AR	t=1.82mm
-	Z-8-94111-663-0	SHIM	AR	t=1.84mm
-	Z-8-94111-664-0	SHIM	AR	t=1.86mm
-	Z-8-94111-665-0	SHIM	AR	t=1.88mm
34	Z-8-94247-716-0	* GASKET	4	
35	Z-8-94227-580-0	VALVE	4	
36	Z-8-94227-581-0	SPRING	4	
37	Z-8-94227-582-0	HOLDER	4	
38	Z-8-94257-670-0	SCREW	4	
39	Z-8-94227-601-0	BOLT	2	
40	Z-8-94227-602-0	GASKET	2	
41	Z-8-94473-128-0	SPRING	2	
42	Z-8-94227-638-0	PLUG	1	INC.43-45
43	Z-8-94227-602-0	* GASKET	1	
44	Z-8-94227-639-0	BOLT	1	
45	Z-8-94227-637-0	* O-RING	1	

H-12 INJECTION PUMP(INNER PARTS)(1/2)

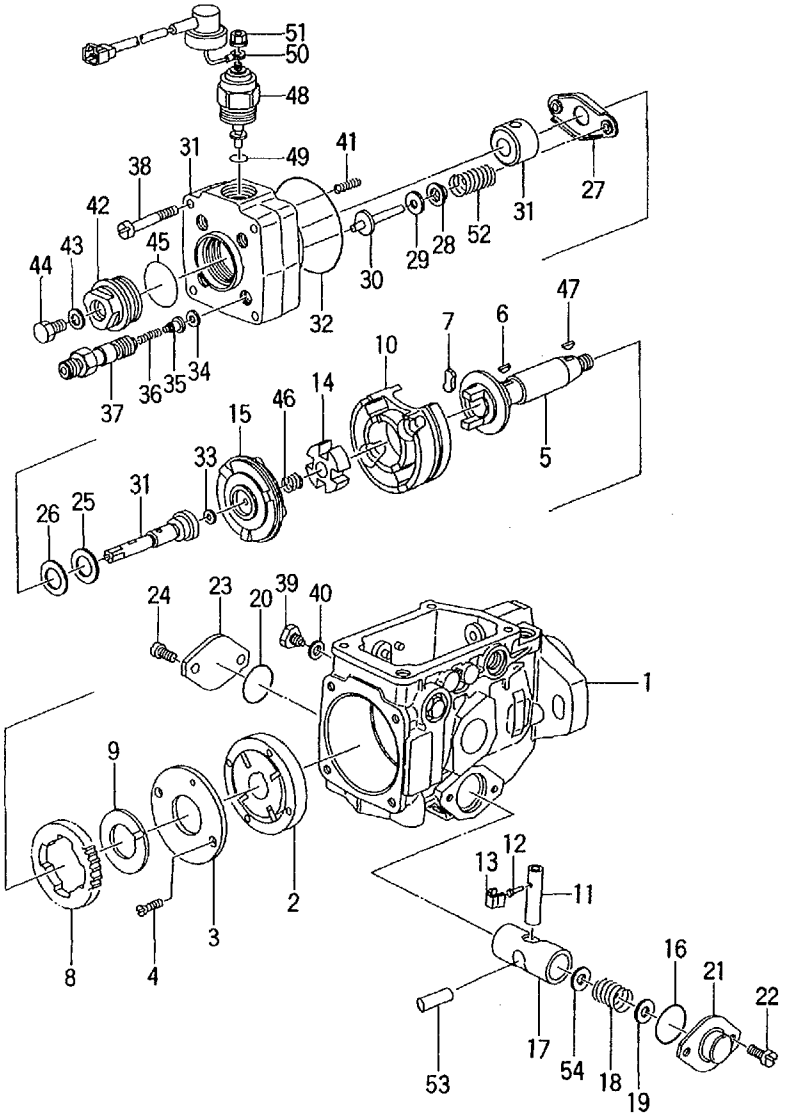

A :4JG2PJ
B :4JG2PJ-01
C :4JG2PJ-02
D :4JG2PJ-03
E :4JG2PJ-04
F :4JG2PJ-05
G :4JG2PJ-07
H :4JG2PJ-08
J :4JG2PJ-09

No.	Part No.	Description	Req'd	Remarks • Serial No.
46	Z-8-94227-647-0	SPRING	1	
47	Z-5-83539-024-0	KEY	1	
48	Z-8-94242-275-0	VALVE,MAGNET	1	
49	Z-8-94239-373-0	O-RING	1	
50	Z-8-94470-582-0	WIRE	1	
51	Z-8-94473-135-0	NUT	1	
52	Z-8-94228-404-0	SPRING	1	
53	Z-8-94433-765-0	SLIDER	1	A,B,E,F,G
-	Z-8-94433-765-0	SLIDER	1	C,D -1997.12
-	Z-8-94227-493-0	SLIDER	1	C,D,H,J 1998.1-
54	Z-8-94227-495-0	SHIM	1	

H-13 INJECTION PUMP(INNER PARTS)(2/2)

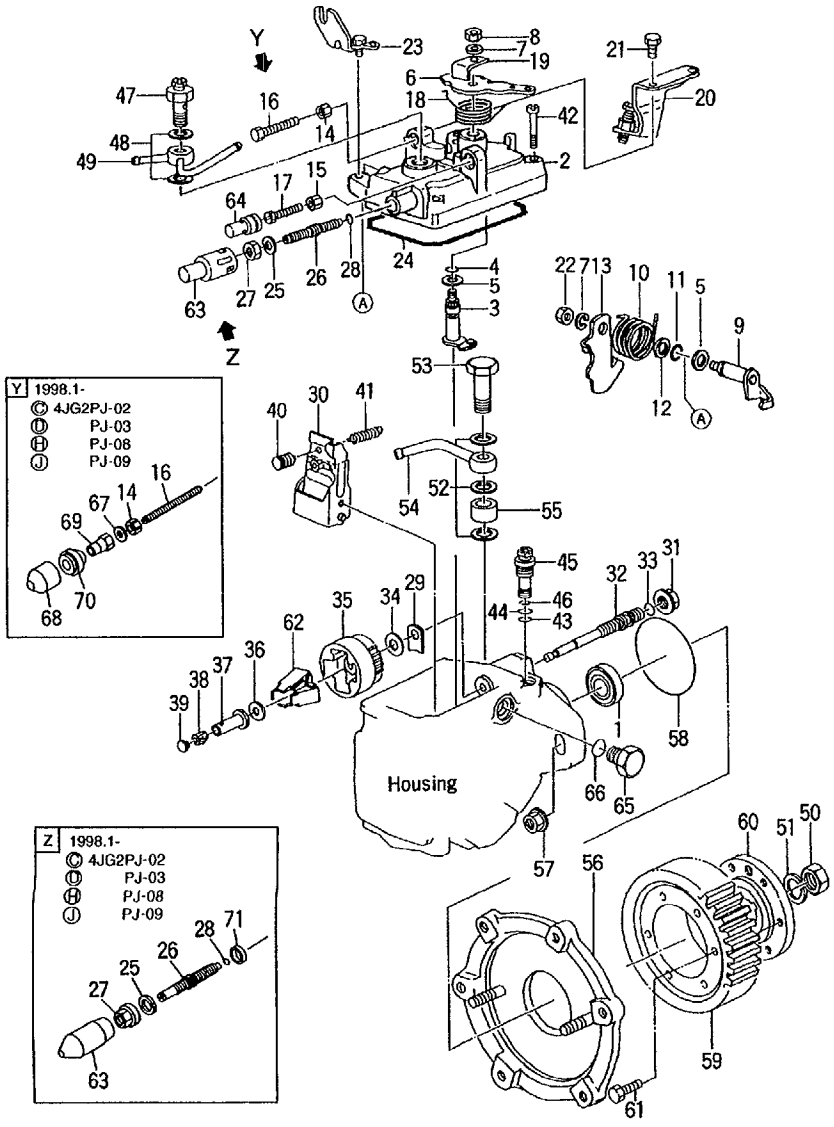

A :4JG2PJ
B :4JG2PJ-01
C :4JG2PJ-02
D :4JG2PJ-03
E :4JG2PJ-04
F :4JG2PJ-05
G :4JG2PJ-07
H :4JG2PJ-08
J :4JG2PJ-09

No.	Part No.	Description	Req'd	Remarks・Serial No.
1	Z-8-94227-475-0	SEAL,OIL	1	A,B,E,F,G
-	Z-8-94227-475-0	SEAL,OIL	1	C,D -1997.12
-	Z-8-97147-034-0	SEAL,OIL	1	C,D,H,J 1998.1-
2	Z-8-94386-593-0	COVER	1	
3	Z-8-94174-828-0	SHAFT	1	
4	Z-8-94227-585-0	O-RING	1	
5	Z-8-94227-590-0	WASHER	2	
6	Z-8-94317-501-0	LEVER	1	
-	Z-8-94317-502-0	LEVER	1	
7	Z-9-0915-0506-0	WASHER	2	
8	Z-9-0911-0406-0	NUT	1	A,B,E,F,G
-	Z-9-0911-0406-0	NUT	1	C,D -1997.12
-	Z-1-15729-006-0	NUT	1	C,D,H,J 1998.1-
9	Z-8-97047-202-0	SHAFT	1	
10	Z-8-94317-504-0	SPRING	1	
11	Z-8-94433-216-0	O-RING	1	
12	Z-8-94433-217-0	WASHER	1	
13	Z-8-94317-505-0	LEVER	1	
-	Z-8-94317-506-0	LEVER	1	
14	Z-8-94426-047-1	NUT	1	
15	Z-8-94426-047-1	NUT	1	
16	Z-8-94426-049-0	BOLT	1	A,B,E,F,G
-	Z-8-94426-049-0	BOLT	1	C,D -1997.12
-	Z-8-97214-477-0	BOLT	1	C,D,H,J 1998.1-
17	Z-8-94426-049-0	BOLT	1	
18	Z-8-94317-507-0	SPRING	1	
19	Z-8-94122-713-0	ANGLE	1	
20	Z-8-94317-508-0	BRACKET	1	
21	Z-8-94313-267-0	BOLT	2	
22	Z-9-0911-0406-0	NUT	1	A,B,E,F,G
-	Z-9-0911-0406-0	NUT	1	C,D -1997.12
-	Z-1-15729-006-0	NUT	1	C,D,H,J 1998.1-

H-14 INJECTION PUMP(INNER PARTS)(2/2)

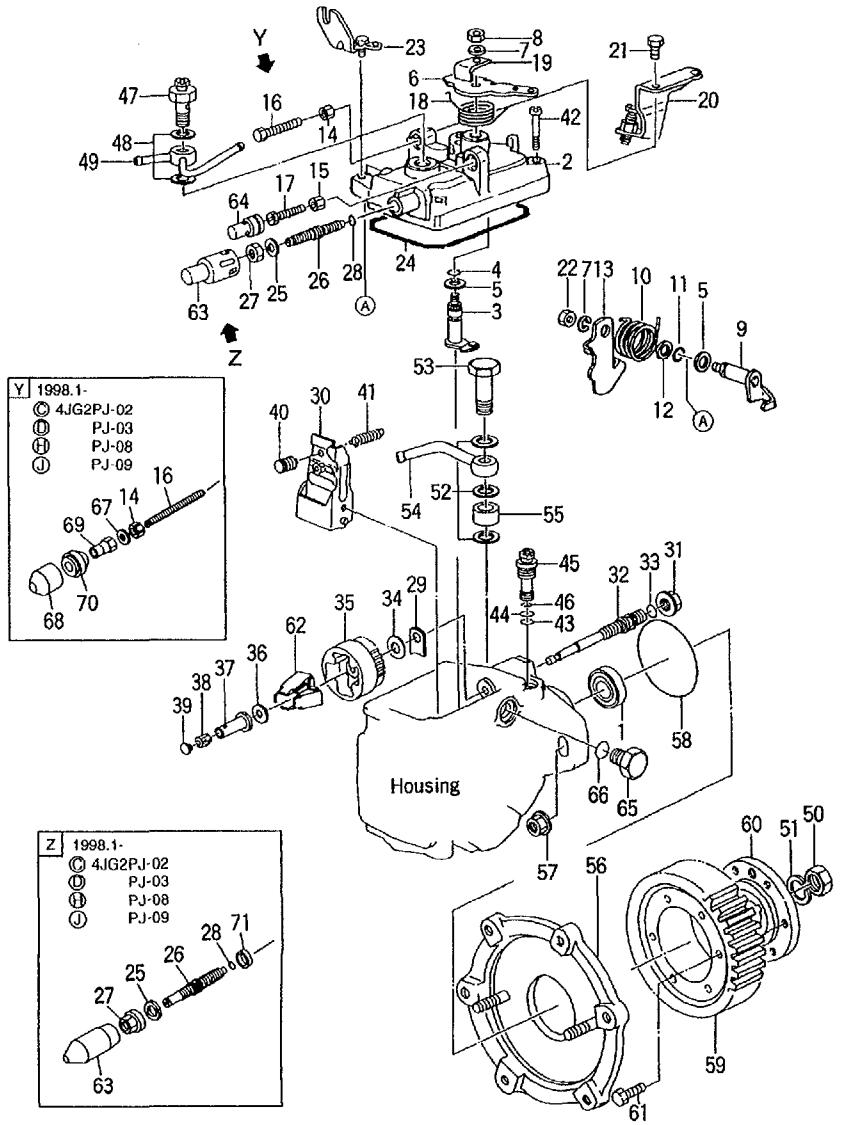

A :4JG2PJ
B :4JG2PJ-01
C :4JG2PJ-02
D :4JG2PJ-03
E :4JG2PJ-04
F :4JG2PJ-05
G :4JG2PJ-07
H :4JG2PJ-08
J :4JG2PJ-09

No.	Part No.	Description	Req'd	Remarks・Serial No.
23	Z-8-94317-509-0	BRACKET	1	
K	Z-8-94228-545-0	KIT,REPAIR	1	INC.24,28,33,43,44 & etc.
24	Z-8-94227-599-0	* SEAL	1	A,B,C,D -1995.7
-	Z-8-97136-413-0	* RING	1	1995.8-
25	Z-8-94227-593-0	WASHER	1	
26	Z-8-94316-274-0	SCREW	1	A,B,E,F,G
-	Z-8-94316-275-0	SCREW	1	A,B,E,F,G
-	Z-8-94316-276-0	SCREW	1	A,B,E,F,G
-	Z-8-94316-274-0	SCREW	1	C,D -1997.12
-	Z-8-94316-275-0	SCREW	1	C,D -1997.12
-	Z-8-94316-276-0	SCREW	1	C,D -1997.12
-	Z-8-97124-479-0	SCREW	1	C,D,H,J 1998.1-
-	Z-8-97124-480-0	SCREW	1	C,D,H,J 1998.1-
-	Z-8-97124-481-0	SCREW	1	C,D,H,J 1998.1-
27	Z-8-94316-277-0	NUT	1	A,B,E,F,G
-	Z-8-94316-277-0	NUT	1	C,D -1997.12
-	Z-8-97214-482-0	NUT	1	C,D,H,J 1998.1-
28	Z-8-94227-598-0	* O-RING	1	
29	Z-8-94227-607-0	SHIM	AR	t=1.05mm
-	Z-8-94227-608-0	SHIM	AR	t=1.25mm
-	Z-8-94227-609-0	SHIM	AR	t=1.45mm
-	Z-8-94227-610-0	SHIM	AR	t=1.65mm
-	Z-8-94227-611-0	SHIM	AR	t=1.85mm
-	Z-8-94231-123-0	SHIM	AR	t=1.15mm
-	Z-8-94231-124-0	SHIM	AR	t=1.35mm
-	Z-8-94231-125-0	SHIM	AR	t=1.55mm
-	Z-8-94231-126-0	SHIM	AR	t=1.75mm
30	Z-8-97119-346-0	LEVER	1	A,B,E,F,G
-	Z-8-97119-346-0	LEVER	1	C,D -1997.12

H-15 INJECTION PUMP(INNER PARTS)(2/2)

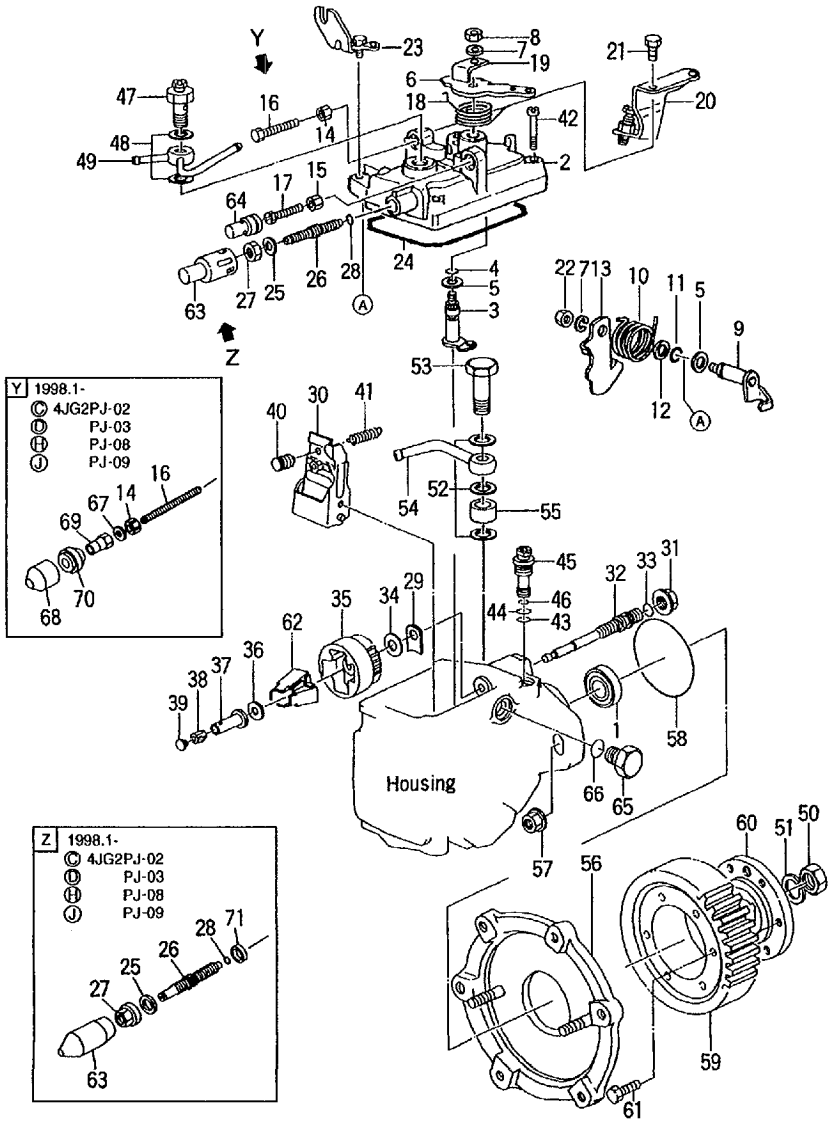

A :4JG2PJ
B :4JG2PJ-01
C :4JG2PJ-02
D :4JG2PJ-03
E :4JG2PJ-04
F :4JG2PJ-05
G :4JG2PJ-07
H :4JG2PJ-08
J :4JG2PJ-09

No.	Part No.	Description	Req'd	Remarks・Serial No.
30	Z-8-97124-473-0	LEVER	1	C,D,H,J 1998.1-
31	Z-8-94473-129-0	NUT	1	
32	Z-8-94248-002-0	SHAFT	1	
33	Z-8-94227-606-0	* O-RING	1	
34	Z-8-94227-612-0	WASHER	1	
35	Z-8-94227-613-0	HOLDER	1	
36	Z-8-94408-517-0	WASHER	1	
37	Z-8-94433-222-0	SLEEVE	1	A,B,C,D -1995.7
-	Z-8-97144-355-0	SLEEVE	1	1995.8-
38	Z-8-94408-519-0	CAP	1	A,B,C,D -1995.7
-	Z-8-97144-356-0	CAP	1	1995.8-
39	Z-8-94408-520-0	PLUG	1	A,B,C,D L=2.1 -1995.7
-	Z-8-94408-521-0	PLUG	1	A,B,C,D L=2.3 -1995.7
-	Z-8-94408-522-0	PLUG	1	A,B,C,D L=2.5 -1995.7
-	Z-8-94408-523-0	PLUG	1	A,B,C,D L=2.7 -1995.7
-	Z-8-94408-524-0	PLUG	1	A,B,C,D L=2.9 -1995.7
-	Z-8-94408-525-0	PLUG	1	A,B,C,D L=3.1 -1995.7
-	Z-8-94408-526-0	PLUG	1	A,B,C,D L=3.3 -1995.7
-	Z-8-94408-527-0	PLUG	1	A,B,C,D L=3.5 -1995.7

H-16 INJECTION PUMP(INNER PARTS)(2/2)

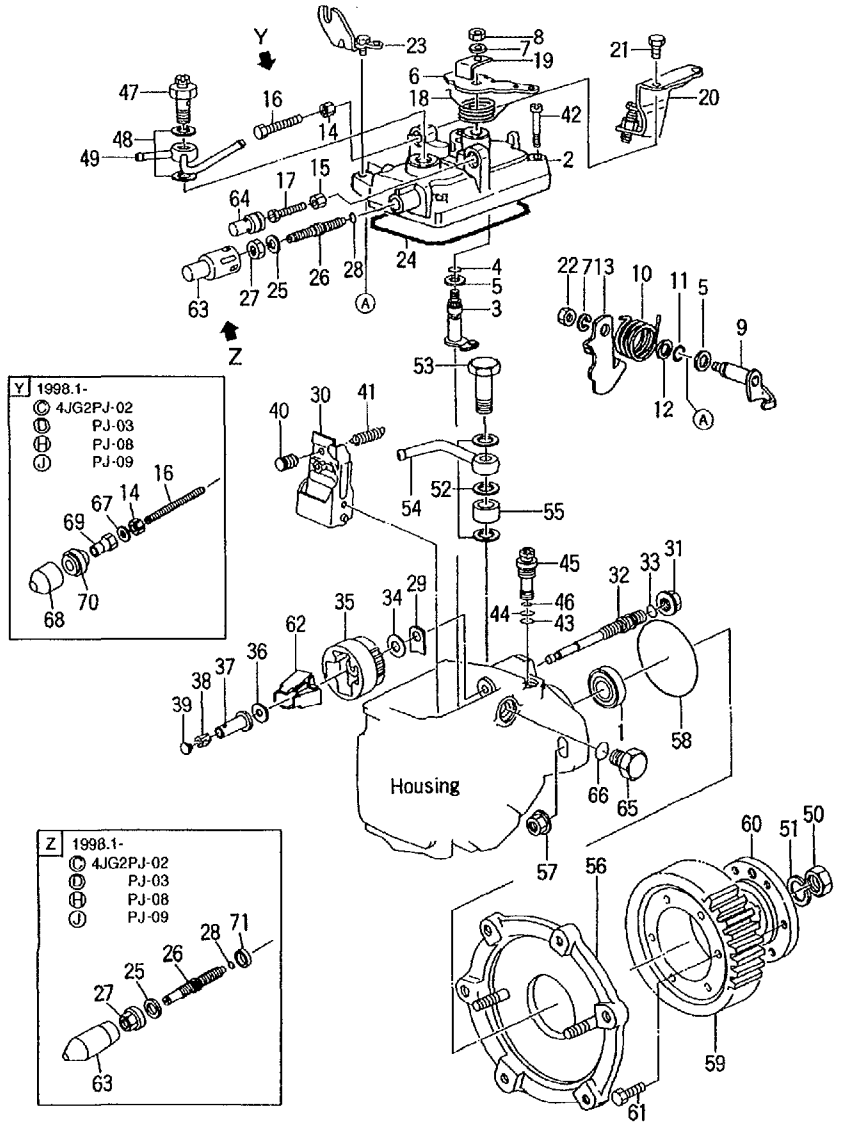

A :4JG2PJ
B :4JG2PJ-01
C :4JG2PJ-02
D :4JG2PJ-03
E :4JG2PJ-04
F :4JG2PJ-05
G :4JG2PJ-07
H :4JG2PJ-08
J :4JG2PJ-09

No.	Part No.	Description	Req'd	Remarks・Serial No.
39	Z-8-94408-528-0	PLUG	1	A,B,C,D L=3.7 -1995.7
-	Z-8-94428-868-0	PLUG	1	A,B,C,D L=2.2 -1995.7
-	Z-8-94428-869-0	PLUG	1	A,B,C,D L=2.4 -1995.7
-	Z-8-94428-870-0	PLUG	1	A,B,C,D L=2.6 -1995.7
-	Z-8-94428-871-0	PLUG	1	A,B,C,D L=2.8 -1995.7
-	Z-8-94428-872-0	PLUG	1	A,B,C,D L=3.0 -1995.7
-	Z-8-94428-873-0	PLUG	1	A,B,C,D L=3.2 -1995.7
-	Z-8-94428-874-0	PLUG	1	A,B,C,D L=3.4 -1995.7
-	Z-8-94428-875-0	PLUG	1	A,B,C,D L=3.6 -1995.7
-	Z-8-97144-357-0	PLUG	1	L=5.0 1995.8-
-	Z-8-97144-358-0	PLUG	1	L=5.1 1995.8-
-	Z-8-97144-359-0	PLUG	1	L=5.2 1995.8-
-	Z-8-97144-360-0	PLUG	1	L=5.3 1995.8-
-	Z-8-97144-361-0	PLUG	1	L=5.4 1995.8-
-	Z-8-97144-362-0	PLUG	1	L=5.5 1995.8-

I-1 INJECTION PUMP(INNER PARTS)(2/2)

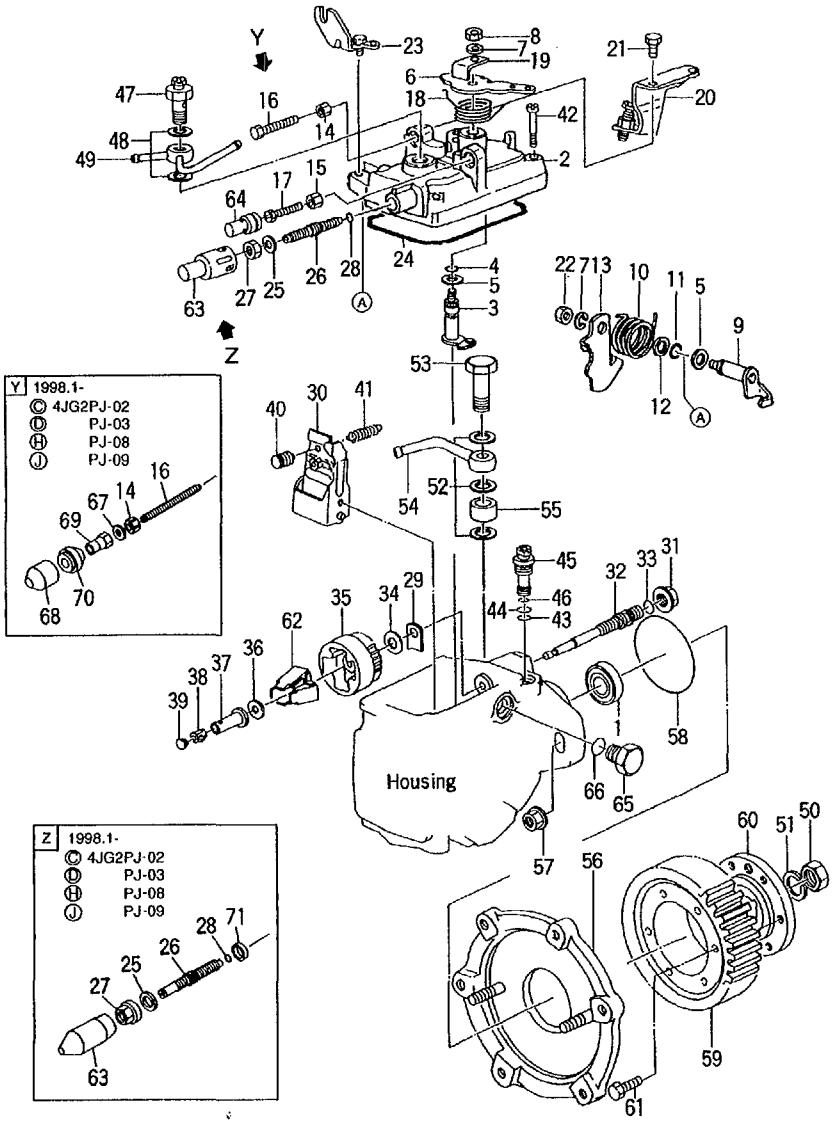

A :4JG2PJ
B :4JG2PJ-01
C :4JG2PJ-02
D :4JG2PJ-03
E :4JG2PJ-04
F :4JG2PJ-05
G :4JG2PJ-07
H :4JG2PJ-08
J :4JG2PJ-09

No.	Part No.	Description	Req'd	Remarks・Serial No.
39	Z-8-97144-363-0	PLUG	1	L=5.6 1995.8-
-	Z-8-97144-364-0	PLUG	1	L=5.7 1995.8-
-	Z-8-97144-365-0	PLUG	1	L=5.8 1995.8-
-	Z-8-97144-366-0	PLUG	1	L=5.9 1995.8-
-	Z-8-97144-367-0	PLUG	1	L=6.0 1995.8-
-	Z-8-97144-368-0	PLUG	1	L=6.1 1995.8-
-	Z-8-97144-369-0	PLUG	1	L=6.2 1995.8-
-	Z-8-97144-370-0	PLUG	1	L=6.3 1995.8-
-	Z-8-97144-371-0	PLUG	1	L=6.4 1995.8-
-	Z-8-97144-372-0	PLUG	1	L=6.5 1995.8-
-	Z-8-97144-373-0	PLUG	1	L=6.6 1995.8-
-	Z-8-97144-374-0	PLUG	1	L=6.7 1995.8-
-	Z-8-97144-375-0	PLUG	1	L=6.8 1995.8-
-	Z-8-97144-376-0	PLUG	1	L=6.9 1995.8-
-	Z-8-97144-377-0	PLUG	1	L=7.0 1995.8-
-	Z-8-97144-378-0	PLUG	1	L=7.1 1995.8-
-	Z-8-97144-379-0	PLUG	1	L=7.2 1995.8-
-	Z-8-97144-380-0	PLUG	1	L=7.3 1995.8-
-	Z-8-97144-381-0	PLUG	1	L=7.4 1995.8-
-	Z-8-97144-382-0	PLUG	1	L=7.5 1995.8-

I-2 INJECTION PUMP(INNER PARTS)(2/2)

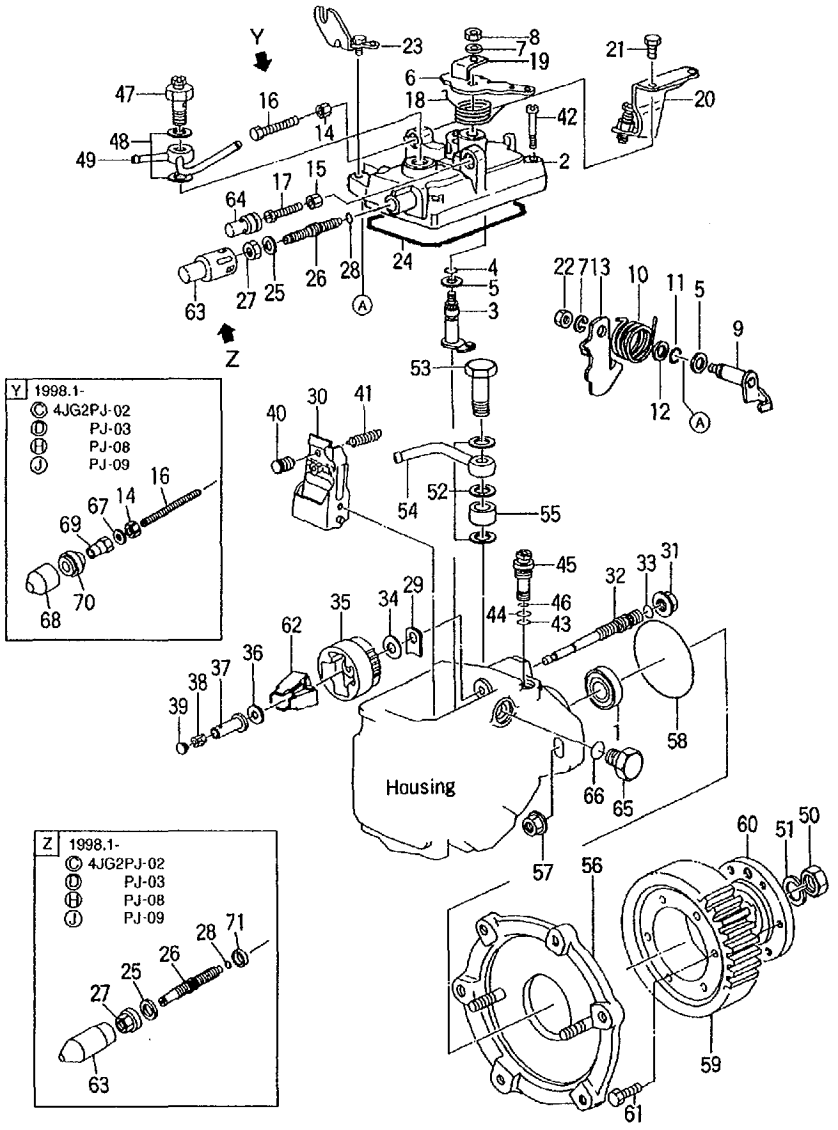

A :4JG2PJ
B :4JG2PJ-01
C :4JG2PJ-02
D :4JG2PJ-03
E :4JG2PJ-04
F :4JG2PJ-05
G :4JG2PJ-07
H :4JG2PJ-08
J :4JG2PJ-09

No.	Part No.	Description	Req'd	Remarks・Serial No.
39	Z-8-97144-383-0	PLUG	1	L=7.6
				1995.8-
-	Z-8-97144-384-0	PLUG	1	L=7.7
				1995.8-
-	Z-8-97144-385-0	PLUG	1	L=7.8
				1995.8-
-	Z-8-97144-386-0	PLUG	1	L=7.9
				1995.8-
-	Z-8-97144-387-0	PLUG	1	L=8.0
				1995.8-
-	Z-8-97144-388-0	PLUG	1	L=8.1
				1995.8-
-	Z-8-97144-389-0	PLUG	1	L=8.2
				1995.8-
-	Z-8-97144-390-0	PLUG	1	L=8.3
				1995.8-
-	Z-8-97144-391-0	PLUG	1	L=8.4
				1995.8-
40	Z-8-97062-241-0	PIN	1	
41	Z-8-97024-244-0	SPRING	1	
42	Z-8-94227-636-0	SCREW	4	
43	Z-8-94227-640-0	* O-RING	1	
44	Z-8-94227-641-0	* O-RING	1	
45	Z-8-94111-671-0	VALVE	1	
46	Z-8-94227-643-0	RING	1	
47	Z-8-97119-184-0	VALVE	1	A
				-1995.2
-	Z-8-97122-063-0	VALVE	1	A,B,E,F,G
				1995.3-
-	Z-8-97122-063-0	VALVE	1	C,D
				1995.3-1997.12
-	Z-8-94227-644-0	VALVE,FLOW	1	C,D,H,J
				1998.1-
48	Z-8-97119-187-0	GASKET	2	
49	Z-8-94317-513-0	PIPE	1	
50	Z-1-15629-006-0	NUT	1	A
				-1995.2
-	Z-8-94226-565-0	NUT	1	1995.3-
51	Z-8-94227-648-0	WASHER	1	A
				-1995.2

I-3 INJECTION PUMP(INNER PARTS)(2/2)

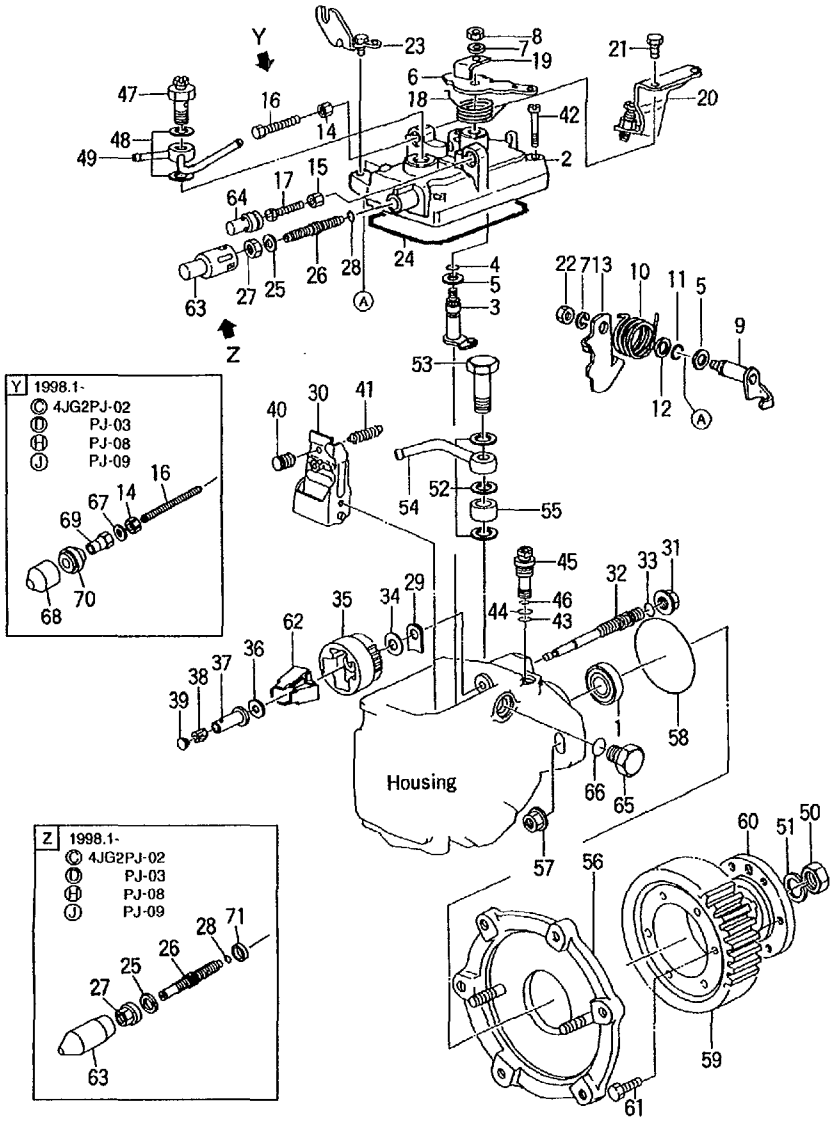

A :4JG2PJ
B :4JG2PJ-01
C :4JG2PJ-02
D :4JG2PJ-03
E :4JG2PJ-04
F :4JG2PJ-05
G :4JG2PJ-07
H :4JG2PJ-08
J :4JG2PJ-09

No.	Part No.	Description	Req'd	Remarks・Serial No.
51	Z-8-94226-554-0	WASHER	1	1995.3-
52	Z-8-97119-187-0	GASKET	3	
53	Z-8-94227-660-0	BOLT,EYE	1	
54	Z-8-94418-036-0	PIPE	1	
55	Z-8-94227-662-0	SPACER	1	
56	Z-8-97119-349-0	BRACKET	1	
57	Z-8-94224-829-0	NUT	2	A
				-1995.2
-	Z-8-97119-344-0	NUT	2	1995.3-
58	Z-8-94247-722-0	O-RING	1	A,B,C,D
				-1995.7
-	Z-9-0956-1353-0	O-RING	1	1995.8-
59	Z-8-94329-691-0	GEAR	1	
60	Z-8-97101-078-0	COUPLING	1	A,B,C,D
				-1995.7
-	Z-8-97108-047-0	COUPLING	1	1995.8-
61	Z-5-15619-112-0	BOLT	6	A,B,C,D
				-1995.7
-	Z-9-0191-0618-0	BOLT	6	1995.8-
62	Z-8-94408-542-0	FLYWEIGHT	1	
63	Z-8-94316-262-0	CAP	1	A,B,E,F,G
-	Z-8-94316-262-0	CAP	1	C,D
				-1997.12
-	Z-8-97214-488-0	CAP	1	C,D,H,J
				1998.1-
64	Z-8-94316-263-0	CAP	1	L=18
-	Z-8-94316-264-0	CAP	1	L=21
-	Z-8-94316-265-0	CAP	1	L=24
-	Z-8-94316-266-0	CAP	1	L=27
65	Z-8-94242-284-0	PLUG	1	
66	Z-8-94227-671-0	O-RING	1	
67	Z-9-0916-0506-0	WASHER	1	C,D,H,J
				1998.1-
68	Z-8-97214-487-0	CAP	1	C,D,H,J
				1998.1-
69	Z-8-97214-484-0	NUT	1	C,D,H,J
				1998.1-
70	Z-8-97214-485-0	ADAPTER	1	C,D,H,J
				1998.1-

I-4 INJECTION PUMP(INNER PARTS)(2/2)

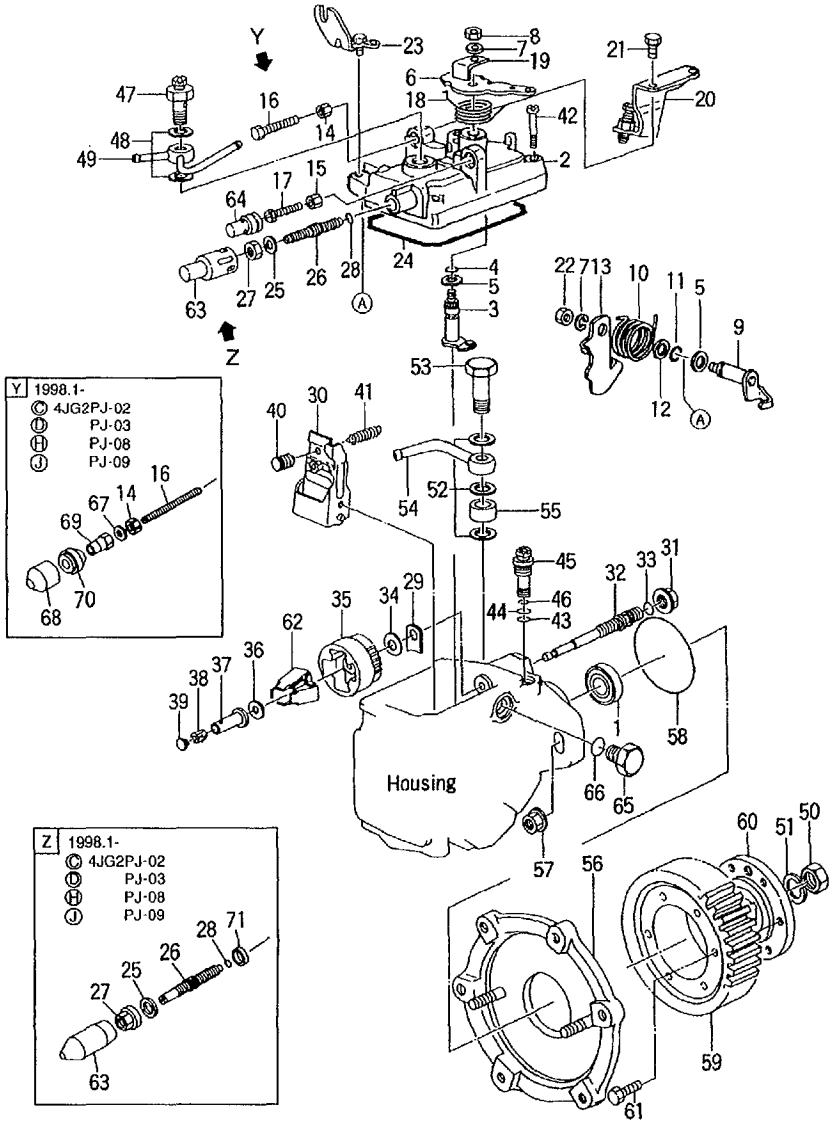

A :4JG2PJ
B :4JG2PJ-01
C :4JG2PJ-02
D :4JG2PJ-03
E :4JG2PJ-04
F :4JG2PJ-05
G :4JG2PJ-07
H :4JG2PJ-08
J :4JG2PJ-09

No.	Part No.	Description	Req'd	Remarks・Serial No.
71	Z-8-97214-483-0	DAMPER	1	C,D,H,J 1998.1-

I-5 FUEL FILTER

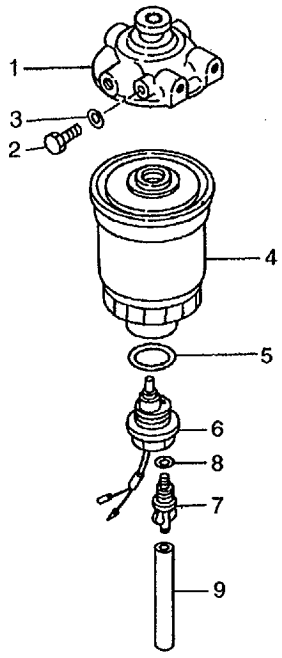

A :4JG2PJ
B :4JG2PJ-01
C :4JG2PJ-02
D :4JG2PJ-03
E :4JG2PJ-04
F :4JG2PJ-05
G :4JG2PJ-07
H :4JG2PJ-08
J :4JG2PJ-09

No.	Part No.	Description	Req'd	Remarks • Serial No.
A1	Z-8-94367-292-2	FUEL FILTER ASSY	1	INC.1-9
1	Z-8-94367-293-3	BODY,FILTER	1	INC.2,3
2	Z-8-94132-674-0	PLUG	1	
3	Z-8-94132-675-0	GASKET	1	
4	Z-8-94369-299-3	KIT,CARTRIDGE	1	INC.5
A2	Z-8-94367-294-0	SENSOR ASSY	1	INC.5,6
5	NO PART NO.	PACKING	1	
6	Z-8-94450-142-0	SENSOR	1	
7	Z-8-94367-957-0	PLUG	1	INC.8
8	NO PART NO.	PACKING	1	
9	Z-8-94367-956-0	HOSE	1	

J-2 STARTER,GENERATOR & ELECTRICAL PARTS

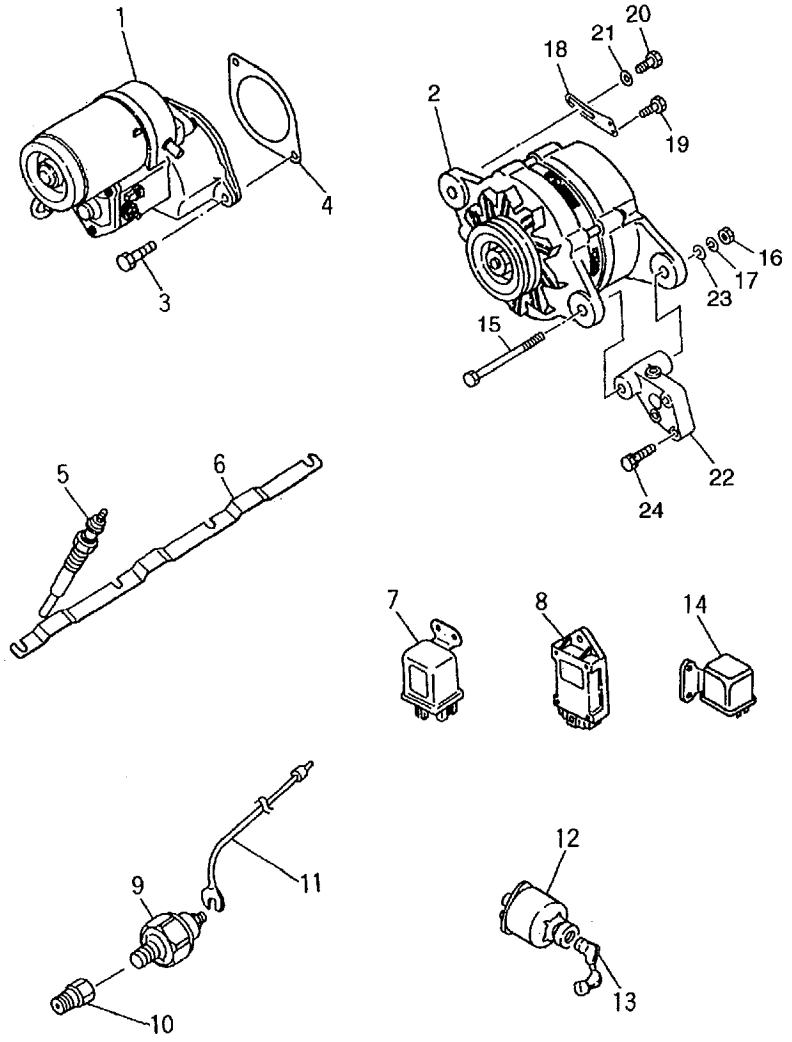

A :4JG2PJ
B :4JG2PJ-01
C :4JG2PJ-02
D :4JG2PJ-03
E :4JG2PJ-04
F :4JG2PJ-05
G :4JG2PJ-07
H :4JG2PJ-08
J :4JG2PJ-09

No.	Part No.	Description	Req'd	Remarks • Serial No.
1	Z-8-97107-896-1	STARTER	1	A,D -1996.10 SEE LOC.J-4
-	Z-8-97042-997-2	STARTER	1	A,D 1996.11- SEE LOC.J-4
-	Z-8-97107-896-1	STARTER	1	B -1997.2 SEE LOC.J-4
-	Z-8-97178-289-1	STARTER	1	B 1997.3- SEE LOC.J-4
-	Z-8-97042-997-2	STARTER	1	C,E,F,G,H,J SEE LOC.J-4
2	Z-8-94338-096-0	GENERATOR	1	A,B,C,D -1995.2 12V-35A SEE LOC.J-6
-	Z-8-94423-756-0	GENERATOR	1	1995.3- 12V-35A SEE LOC.J-8
-	Z-8-94404-791-0	GENERATOR	1	C(GE) 12V-60A
3	Z-0-5005-1228-0	BOLT & WASHER	2	A,B,C,D,E,F -1998.5
-	Z-0-2878-1230-0	BOLT	2	1998.6-
4	Z-8-97109-380-0	SPACER	1	B
5	Z-8-97043-744-1	PLUG,GLOW	4	
6	Z-8-94368-252-0	CONNECTOR	1	
7	Z-8-94248-161-0	RELAY	1	
8	Z-8-97105-790-0	RELAY	1	
A	Z-5-82410-012-2	SWITCH ASSY	1	INC.9,10
9	Z-1-82410-008-2	SWITCH,OIL PRESSURE	1	
10	Z-9-09902-238-0	ADAPTER	1	
11	Z-5-82650-093-0	CABLE	1	
12	Z-1-82310-006-0	SWITCH,STARTER	1	A,B,D INC.13 -1995.5

J-3 STARTER,GENERATOR & ELECTRICAL PARTS

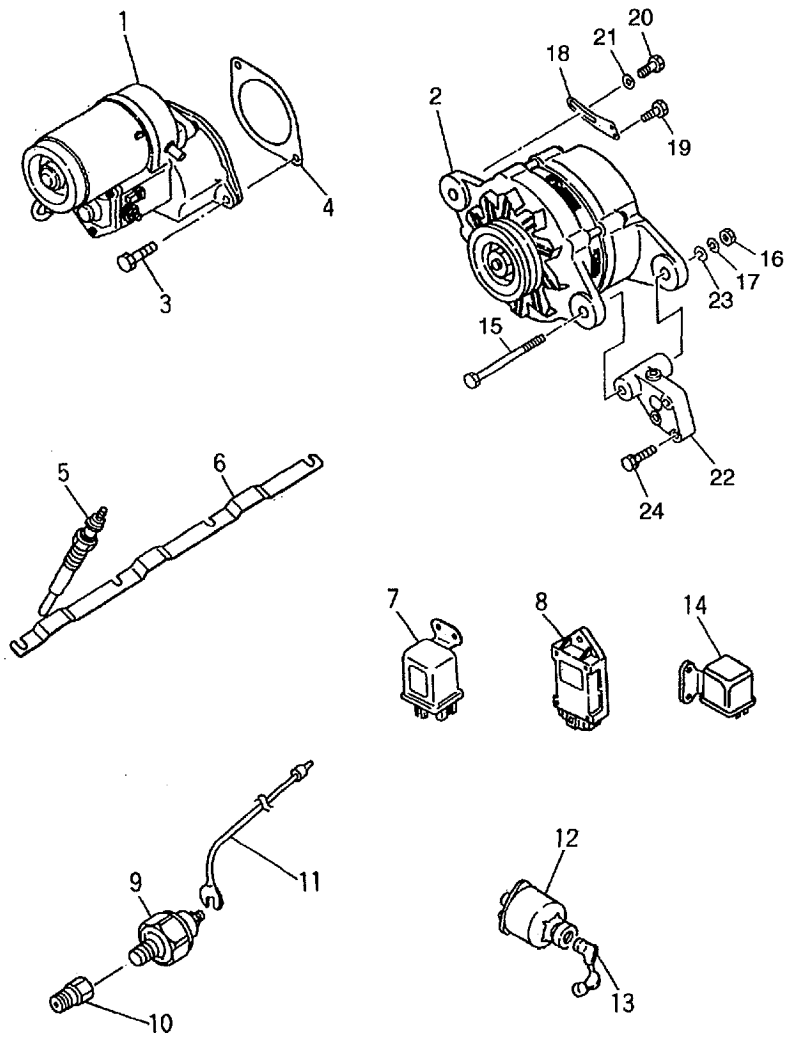

A :4JG2PJ
B :4JG2PJ-01
C :4JG2PJ-02
D :4JG2PJ-03
E :4JG2PJ-04
F :4JG2PJ-05
G :4JG2PJ-07
H :4JG2PJ-08
J :4JG2PJ-09

No.	Part No.	Description	Req'd	Remarks • Serial No.
12	Z-1-82310-006-0	SWITCH,STARTER	1	C INC.13 -1996.10
-	Z-8-94402-500-0	SWITCH,STARTER	1	C INC.13 1996.11-
13	Z-1-82316-007-0	KEY	1	A,B,D -1995.5
-	Z-1-82316-007-0	KEY	1	C -1996.10
-	Z-8-94402-498-0	KEY	1	C 1996.11-
14	Z-5-82550-029-0	RELAY	1	A,B,D,E,F,G,H,J
15	Z-9-09800-997-1	BOLT	1	A -1994.8
-	Z-9-09801-079-1	BOLT	1	A,B,C,D 1994.9-1995.2
-	Z-9-09801-202-1	BOLT	1	A,B,C,D,E,F 1995.3-1998.5
-	Z-0-2808-5812-0	BOLT	1	1998.6-
-	Z-9-09801-034-1	BOLT	1	C(GE)
16	Z-9-0911-0408-0	NUT	1	
17	Z-9-0915-0508-0	WASHER	1	
18	Z-8-94338-193-0	PLATE	1	A,B,C,D -1995.2
-	Z-8-94149-358-0	PLATE	1	1995.3-
19	Z-0-5004-0828-0	BOLT & WASHER	2	A,B,C,D,E,F -1998.5
-	Z-0-2868-0830-0	BOLT	2	1998.6-
20	Z-0-5004-0822-0	BOLT	1	
21	Z-9-0916-4708-0	WASHER	1	
22	Z-8-94337-863-0	BRACKET	1	A,B,C,D -1995.2
-	Z-8-94170-136-0	BRACKET	1	1995.3-
-	Z-8-94170-136-0	BRACKET	1	C(GE)
23	Z-9-0916-0508-0	WASHER	1	
24	Z-0-5004-0835-0	BOLT	2	
-	Z-5-09000-084-1	BOLT	1	

J-4 STARTER(INNER PARTS)

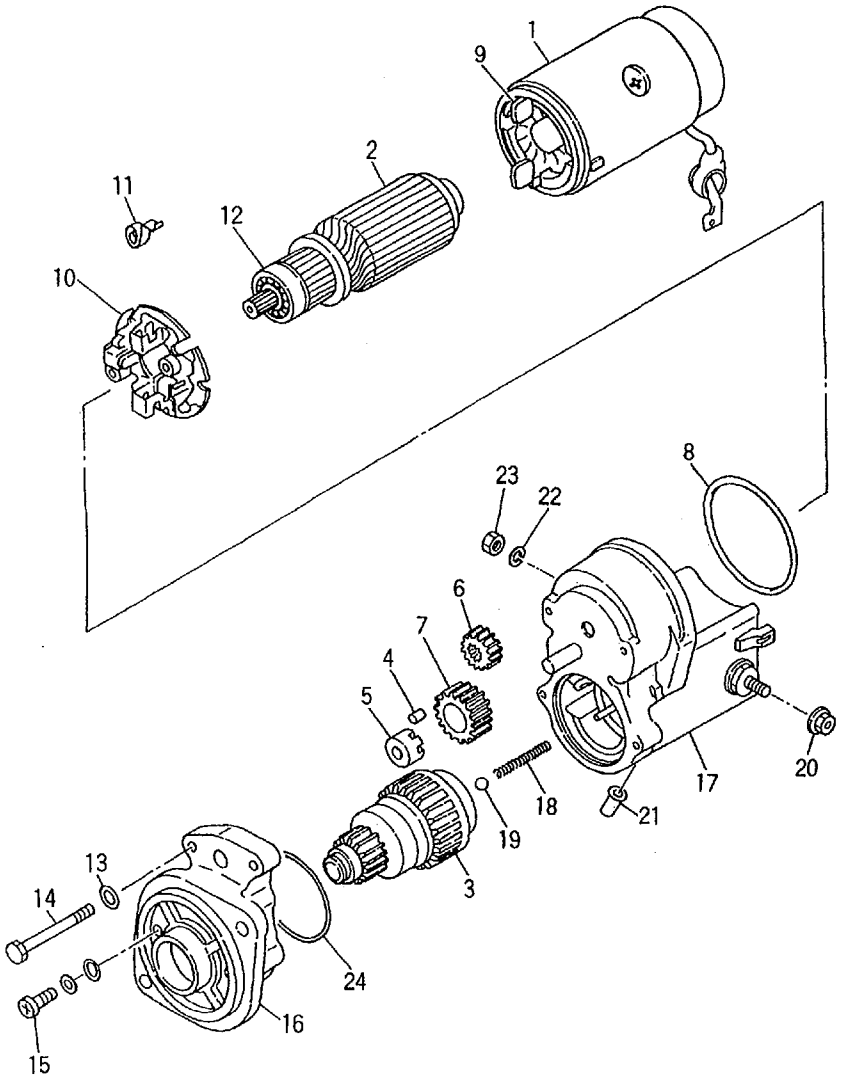

A :4JG2PJ
B :4JG2PJ-01
C :4JG2PJ-02
D :4JG2PJ-03
E :4JG2PJ-04
F :4JG2PJ-05
G :4JG2PJ-07
H :4JG2PJ-08
J :4JG2PJ-09

No.	Part No.	Description	Req'd	Remarks・Serial No.
A1	Z-8-97107-896-1	STARTER ASSY	1	A,D INC.1-23 -1996.10
-	Z-8-97107-896-1	STARTER ASSY	1	B INC.1-23 -1997.2
A2	Z-8-97042-997-2	STARTER ASSY	1	A,D INC.1-24 1996.11-
-	Z-8-97042-997-2	STARTER ASSY	1	C,E,F,G,H,J INC.1-24
A3	Z-8-97178-289-1	STARTER ASSY	1	B INC.1-24 1997.3-
1	Z-8-94167-425-0	YOKE	1	
2	Z-8-97083-193-0	ARMATURE	1	
3	Z-8-97109-092-0	CLUTCH	1	A,B,D FOR A1 -1995.8
-	Z-8-97162-704-0	CLUTCH	1	A,B,D FOR A1,A3 1995.9-
-	Z-5-81124-003-1	CLUTCH	1	A,C,D,E,F,G,H,J FOR A2
4	Z-5-81129-099-0	ROLLER	5	
5	Z-5-81129-100-0	RETAINER	1	
6	Z-5-81123-010-0	GEAR,PINION	1	
7	Z-8-94167-427-0	PINION	1	
8	Z-8-94167-428-0	O-RING	1	
9	Z-8-97083-194-0	BRUSH	1	
10	Z-8-94167-430-0	HOLDER	1	
11	Z-5-81117-015-0	SPRING	4	
12	Z-8-97083-195-0	BEARING,BALL	1	
13	Z-5-81129-211-0	O-RING	2	
14	Z-8-94167-433-0	BOLT	2	
15	Z-8-94167-434-0	SCREW	2	
16	Z-8-97109-093-0	HOUSING	1	A,B,D FOR A1
-	Z-8-94167-435-0	HOUSING	1	A,C,D,E,F,G,H,J FOR A2

J-5 STARTER(INNER PARTS)

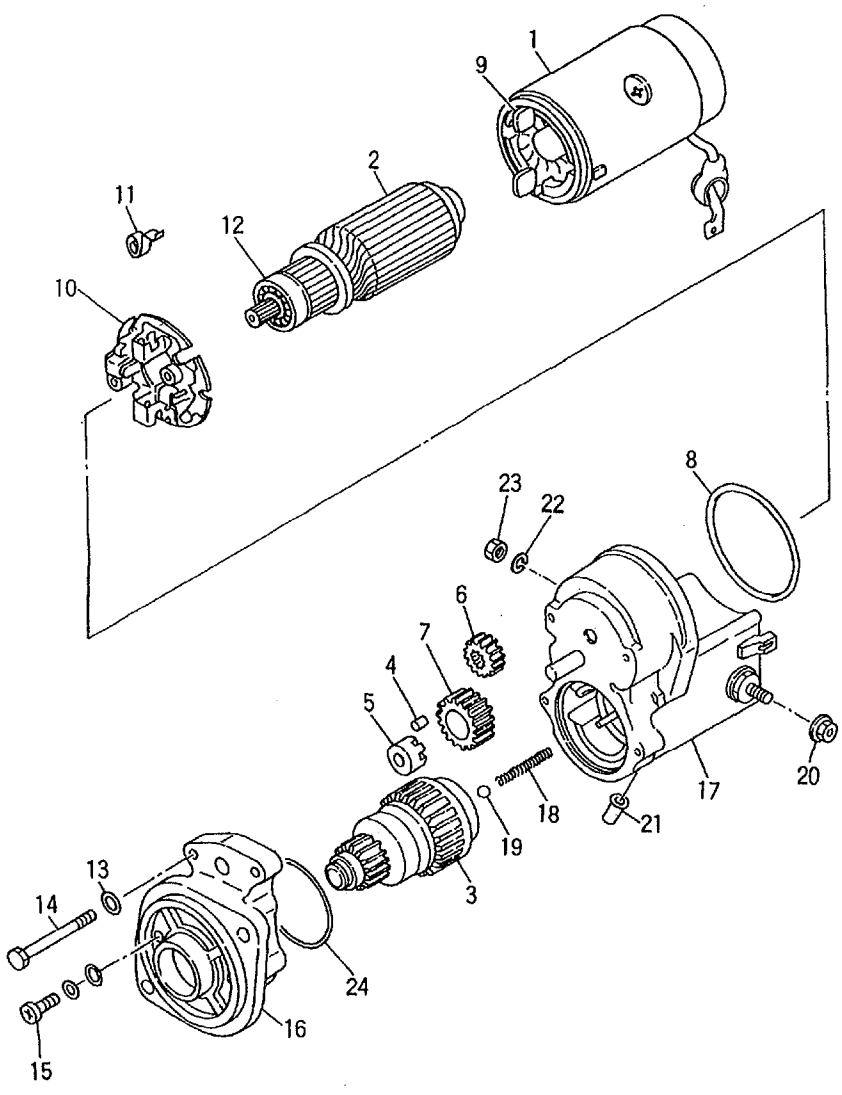

A :4JG2PJ
B :4JG2PJ-01
C :4JG2PJ-02
D :4JG2PJ-03
E :4JG2PJ-04
F :4JG2PJ-05
G :4JG2PJ-07
H :4JG2PJ-08
J :4JG2PJ-09

No.	Part No.	Description	Req'd	Remarks • Serial No.
16	Z-8-97178-259-0	HOUSING	1	B FOR A3
17	Z-8-97083-196-0	SWITCH	1	
18	Z-5-81129-096-0	SPRING	1	
19	Z-5-81129-092-0	BALL	1	
20	Z-5-09400-042-0	NUT	1	
21	Z-1-81129-677-0	COVER	2	
22	Z-9-0915-0508-0	WASHER	1	
23	Z-9-0911-0508-0	NUT	1	
24	Z-8-97162-705-0	O-RING	1	FOR A2,A3

J-6 GENERATOR(INNER PARTS:-129128)

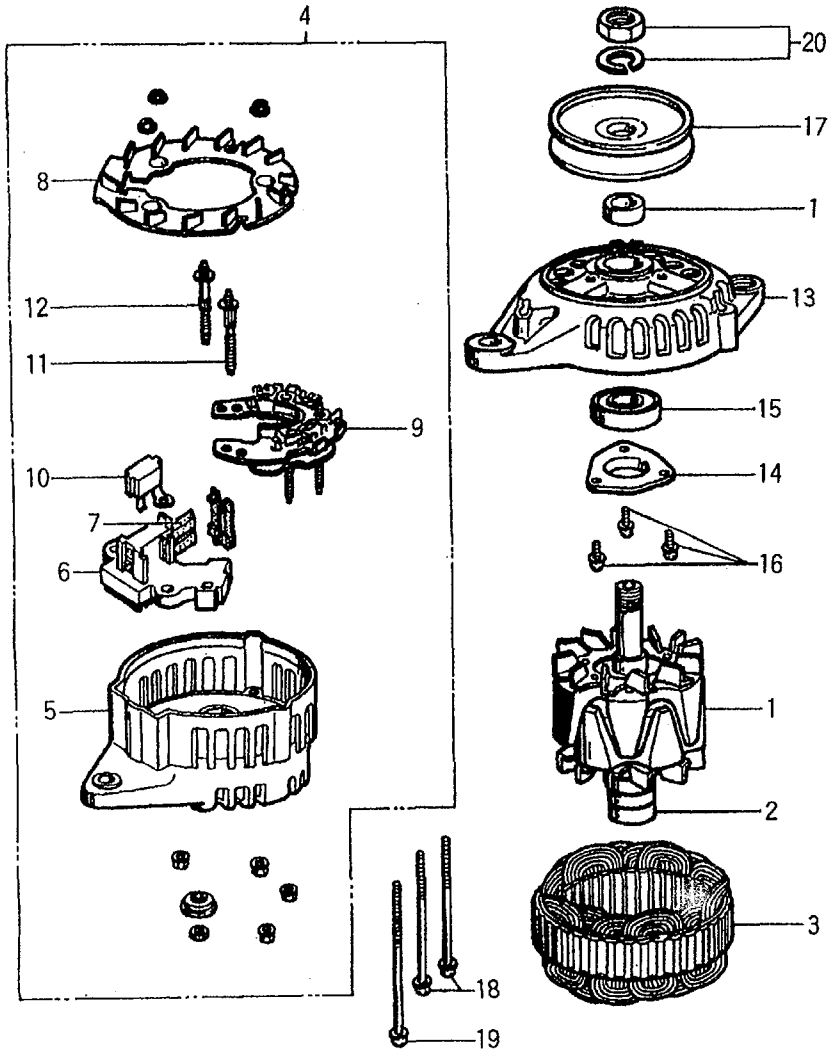

A :4JG2PJ
B :4JG2PJ-01
C :4JG2PJ-02
D :4JG2PJ-03
E :4JG2PJ-04
F :4JG2PJ-05
G :4JG2PJ-07
H :4JG2PJ-08
J :4JG2PJ-09

No.	Part No.	Description	Req'd	Remarks • Serial No.
A	Z-8-94338-096-0	GENERATOR	1	A:1-129128,B:1-129128, C:1-129128,D:1-129128 INC.1-20
1	Z-8-94389-245-0	ROTOR	1	A:1-129128,B:1-129128, C:1-129128,D:1-129128 INC.2
2	Z-8-94389-242-0	BEARING,BALL	1	A:1-129128,B:1-129128, C:1-129128,D:1-129128
3	Z-8-94389-246-0	STATOR	1	A:1-129128,B:1-129128, C:1-129128,D:1-129128
4	Z-8-94389-232-0	COVER,REAR	1	A:1-129128,B:1-129128, C:1-129128,D:1-129128 INC.5-12
5	Z-8-94389-233-0	COVER,REAR	1	A:1-129128,B:1-129128, C:1-129128,D:1-129128
6	Z-8-94389-234-0	REGULATOR	1	A:1-129128,B:1-129128, C:1-129128,D:1-129128 INC.7
7	Z-8-94462-850-0	BRUSH	2	A:1-129128,B:1-129128, C:1-129128,D:1-129128
8	Z-8-94389-235-0	GUIDE,FAN	1	A:1-129128,B:1-129128, C:1-129128,D:1-129128
9	Z-8-94389-236-0	DIODE	1	A:1-129128,B:1-129128, C:1-129128,D:1-129128
10	Z-8-94389-237-0	CONDENSER	1	A:1-129128,B:1-129128, C:1-129128,D:1-129128
11	Z-8-94389-243-0	BOLT	1	A:1-129128,B:1-129128, C:1-129128,D:1-129128
12	Z-8-94389-244-0	BOLT	1	A:1-129128,B:1-129128, C:1-129128,D:1-129128
13	Z-8-94389-238-0	COVER,FRONT	1	A:1-129128,B:1-129128, C:1-129128,D:1-129128 INC.14-16
14	Z-8-94389-239-0	RETAINER	1	A:1-129128,B:1-129128, C:1-129128,D:1-129128
15	Z-8-94389-241-0	BEARING,BALL	1	A:1-129128,B:1-129128, C:1-129128,D:1-129128
16	Z-8-94410-345-0	KIT,SCREW	1	A:1-129128,B:1-129128, C:1-129128,D:1-129128

J-7 GENERATOR(INNER PARTS:-129128)

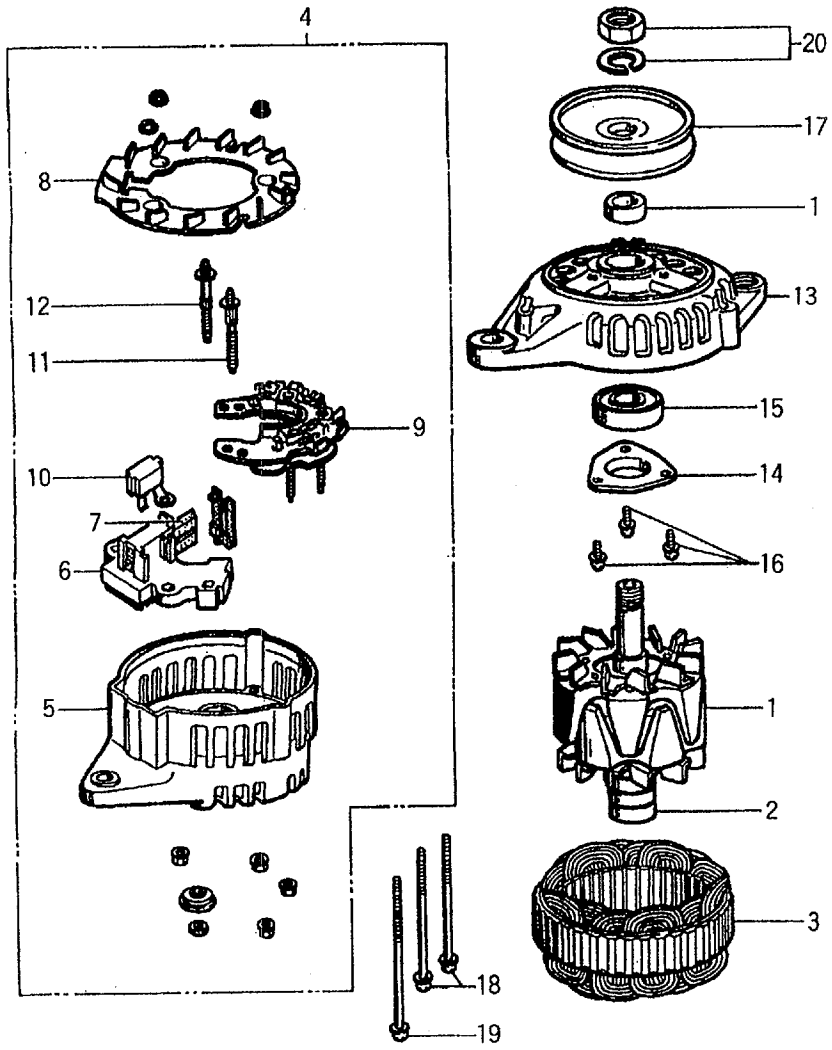

A :4JG2PJ
B :4JG2PJ-01
C :4JG2PJ-02
D :4JG2PJ-03
E :4JG2PJ-04
F :4JG2PJ-05
G :4JG2PJ-07
H :4JG2PJ-08
J :4JG2PJ-09

No.	Part No.	Description	Req'd	Remarks・Serial No.
17	Z-8-94389-240-0	PULLEY	1	A:1-129128,B:1-129128, C:1-129128,D:1-129128
18	Z-5-81219-189-0	BOLT	2	A:1-129128,B:1-129128, C:1-129128,D:1-129128
19	Z-8-94424-373-0	BOLT	1	A:1-129128,B:1-129128, C:1-129128,D:1-129128
20	Z-8-94410-344-0	NUT	1	A:1-129128,B:1-129128, C:1-129128,D:1-129128

J-8 GENERATOR(INNER PARTS:129129-)

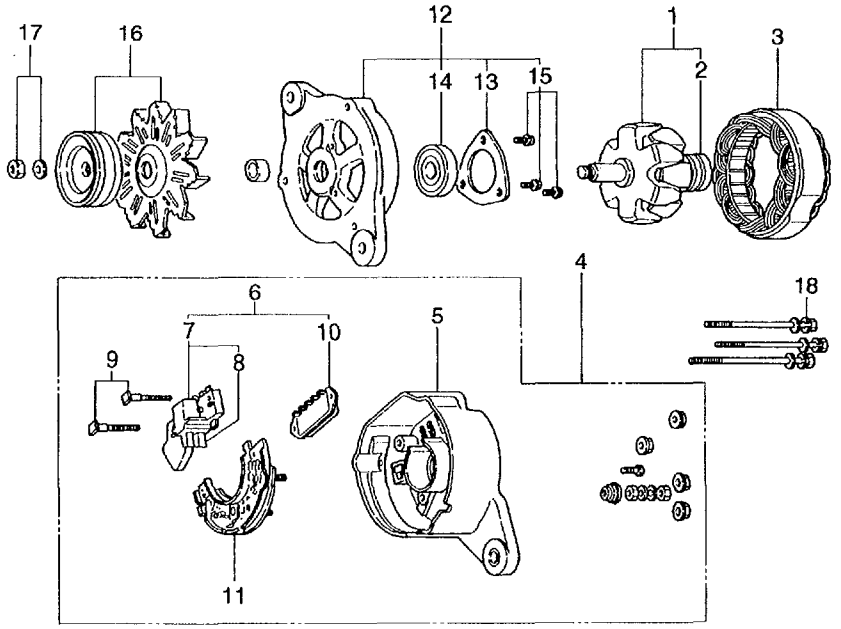

A :4JG2PJ
B :4JG2PJ-01
C :4JG2PJ-02
D :4JG2PJ-03
E :4JG2PJ-04
F :4JG2PJ-05
G :4JG2PJ-07
H :4JG2PJ-08
J :4JG2PJ-09

No.	Part No.	Description	Req'd	Remarks · Serial No.
A	Z-8-94423-756-0	GENERATOR	1	INC.1-18
				12V 35A
1	Z-5-81221-063-0	ROTOR	1	INC.2
2	Z-9-00090-181-0	BEARING,BALL	1	
3	Z-5-81211-058-0	STATOR	1	
4	Z-5-81214-131-0	COVER,REAR	1	INC.5-11
5	Z-5-81214-132-0	COVER,REAR	1	
6	Z-5-81219-036-0	REGULATOR	1	INC.7-10
7	Z-5-81215-046-0	BRUSH	1	INC.8
8	Z-5-81215-040-0	BRUSH SET	2	
9	Z-5-81229-166-0	BOLT	2	
10	Z-5-81270-004-0	REGULATOR	1	
11	Z-5-81262-005-0	HOLDER	1	
12	Z-5-81213-043-0	COVER,FRONT	1	INC.13-15
13	Z-5-81229-029-0	RETAINER	1	
14	Z-5-09800-087-0	BEARING,BALL	1	
15	Z-5-81229-165-0	KIT,SCREW	1	
16	Z-5-81222-077-0	PULLEY	1	
17	Z-9-8223-5015-0	NUT	1	
18	Z-5-81229-182-0	BOLT	2	
-	Z-5-81229-183-0	BOLT	1	

M-2 PARTS NUMBER INDEX

PART No.	LOCATION	PART No.	LOCATION	PART No.	LOCATION	PART No.	LOCATION	PART No.	LOCATION	PART No.	LOCATION
Z-0-0326-6300-0	F-6	Z-0-5004-0812-0	F-5	Z-1-09600-005-1	D-2	Z-5-11219-018-0	C-3	Z-5-81262-005-0	J-8	Z-5-87813-209-0	C-2
Z-0-1080-6270-0	C-10	Z-0-5004-0812-0	G-4	Z-1-09600-011-2	D-2	Z-5-11321-009-0	C-8	Z-5-81270-004-0	J-8	Z-5-87813-209-0	C-5
Z-0-2080-1025-0	C-13	Z-0-5004-0816-0	D-5	Z-1-09600-011-2	D-2	Z-5-11321-036-0	C-9	Z-5-82410-012-2	J-2	Z-5-87813-210-0	C-2
Z-0-2080-1225-0	C-13	Z-0-5004-0816-0	G-4	Z-1-09605-050-0	C-3	Z-5-11322-018-0	C-9	Z-5-82550-029-0	J-3	Z-5-87813-210-0	C-5
Z-0-2808-0612-0	C-8	Z-0-5004-0818-0	C-11	Z-1-09623-235-0	C-11	Z-5-11341-104-3	C-13	Z-5-82650-093-0	J-2	Z-5-87813-211-0	C-2
Z-0-2808-0620-0	F-5	Z-0-5004-0818-0	D-4	Z-1-09704-018-1	H-3	Z-5-11721-016-0	D-2	Z-5-83539-024-0	H-12	Z-5-87813-211-0	C-5
Z-0-2808-0620-0	G-4	Z-0-5004-0820-0	C-9	Z-1-13671-208-0	G-3	Z-5-12519-002-1	D-5	Z-5-87812-637-2	C-3	Z-5-87813-225-0	C-3
Z-0-2808-0810-0	F-5	Z-0-5004-0820-0	F-5	Z-1-13671-208-0	G-3	Z-5-12563-001-0	D-3	Z-5-87812-637-2	C-8	Z-5-87813-225-0	C-8
Z-0-2808-0812-0	F-6	Z-0-5004-0820-0	G-3	Z-1-13671-217-0	G-3	Z-5-12565-004-0	D-5	Z-5-87812-637-2	C-11	Z-5-87813-225-0	C-11
Z-0-2808-0816-0	C-11	Z-0-5004-0820-0	G-3	Z-1-15629-006-0	I-2	Z-5-12569-006-0	D-3	Z-5-87812-637-2	D-2	Z-5-87813-225-0	D-2
Z-0-2808-0816-0	G-3	Z-0-5004-0822-0	D-4	Z-1-15729-006-0	H-13	Z-5-13641-042-4	G-4	Z-5-87812-637-2	E-2	Z-5-87813-225-0	E-2
Z-0-2808-0825-0	E-2	Z-0-5004-0822-0	J-3	Z-1-15729-006-0	H-13	Z-5-13642-064-0	G-2	Z-5-87812-637-2	F-3	Z-5-87813-225-0	F-3
Z-0-2808-0840-0	C-8	Z-0-5004-0825-0	E-2	Z-1-81129-677-0	J-5	Z-5-15419-013-1	H-2	Z-5-87812-637-2	F-5	Z-5-87813-225-0	F-5
Z-0-2808-0860-0	C-9	Z-0-5004-0825-0	H-7	Z-1-82310-006-0	J-2	Z-5-15419-036-0	H-3	Z-5-87812-637-2	G-2	Z-5-87813-225-0	G-2
Z-0-2808-0860-0	G-2	Z-0-5004-0828-0	J-3	Z-1-82310-006-0	J-3	Z-5-15419-036-0	H-3	Z-5-87812-637-2	H-2	Z-5-87813-225-0	H-2
Z-0-2808-0860-0	H-6	Z-0-5004-0830-0	E-3	Z-1-82316-007-0	J-3	Z-5-15419-036-0	H-3	Z-5-87812-637-2	H-4	Z-5-87813-225-0	H-4
Z-0-2808-0860-0	H-7	Z-0-5004-0835-0	C-9	Z-1-82316-007-0	J-3	Z-5-15619-112-0	I-3	Z-5-87812-637-2	H-6	Z-5-87813-225-0	H-6
Z-0-2808-0870-0	C-9	Z-0-5004-0835-0	D-4	Z-1-82410-008-2	J-2	Z-5-81117-015-0	J-4	Z-5-87812-638-2	C-3	Z-5-87813-226-0	C-3
Z-0-2808-0870-0	H-7	Z-0-5004-0835-0	G-3	Z-5-09000-069-0	D-5	Z-5-81123-010-0	J-4	Z-5-87812-638-2	C-8	Z-5-87813-226-0	C-8
Z-0-2808-0870-0	H-7	Z-0-5004-0835-0	G-3	Z-5-09000-084-1	J-3	Z-5-81124-003-1	J-4	Z-5-87812-638-2	C-11	Z-5-87813-226-0	C-11
Z-0-2808-1020-0	G-4	Z-0-5004-0835-0	J-3	Z-5-09000-227-0	C-13	Z-5-81129-092-0	J-5	Z-5-87812-638-2	D-2	Z-5-87813-226-0	D-3
Z-0-2808-1035-0	G-4	Z-0-5004-0840-0	G-2	Z-5-09030-013-1	H-7	Z-5-81129-096-0	J-5	Z-5-87812-638-2	E-2	Z-5-87813-226-0	E-2
Z-0-2808-1270-0	C-10	Z-0-5004-0840-0	H-3	Z-5-09400-042-0	J-5	Z-5-81129-099-0	J-4	Z-5-87812-638-2	F-3	Z-5-87813-226-0	F-3
Z-0-2808-5812-0	J-3	Z-0-5004-0840-0	H-3	Z-5-09503-127-0	C-6	Z-5-81129-100-0	J-4	Z-5-87812-638-2	F-5	Z-5-87813-226-0	F-5
Z-0-2868-0820-0	D-4	Z-0-5004-0845-0	C-8	Z-5-09600-013-0	C-3	Z-5-81129-211-0	J-4	Z-5-87812-638-2	G-2	Z-5-87813-226-0	G-2
Z-0-2868-0820-0	G-4	Z-0-5004-0850-0	G-3	Z-5-09600-013-0	D-2	Z-5-81211-058-0	J-8	Z-5-87812-638-2	H-2	Z-5-87813-226-0	H-2
Z-0-2868-0825-0	C-12	Z-0-5004-0860-0	H-3	Z-5-09605-005-0	G-2	Z-5-81213-043-0	J-8	Z-5-87812-638-2	H-4	Z-5-87813-226-0	H-4
Z-0-2868-0825-0	H-7	Z-0-5004-0860-0	H-3	Z-5-09605-005-0	G-3	Z-5-81214-131-0	J-8	Z-5-87812-638-2	H-6	Z-5-87813-226-0	H-6
Z-0-2868-0830-0	F-3	Z-0-5004-0860-0	H-6	Z-5-09623-002-0	F-5	Z-5-81214-132-0	J-8	Z-5-87813-205-0	C-2	Z-5-87813-227-0	C-3
Z-0-2868-0830-0	J-3	Z-0-5004-0860-0	H-7	Z-5-09625-079-0	C-8	Z-5-81215-040-0	J-8	Z-5-87813-205-0	C-2	Z-5-87813-227-0	C-8
Z-0-2868-0835-0	D-4	Z-0-5004-0870-0	H-7	Z-5-09675-018-1	F-5	Z-5-81215-046-0	J-8	Z-5-87813-205-0	C-5	Z-5-87813-227-0	C-11
Z-0-2868-0835-0	G-3	Z-0-5004-1035-0	D-4	Z-5-09800-078-0	C-6	Z-5-81219-036-0	J-8	Z-5-87813-205-0	C-5	Z-5-87813-227-0	D-2
Z-0-2868-0840-0	G-3	Z-0-5005-1025-0	E-2	Z-5-09800-087-0	J-8	Z-5-81219-189-0	J-7	Z-5-87813-206-0	C-2	Z-5-87813-227-0	E-2
Z-0-2868-1025-0	G-4	Z-0-5005-1228-0	J-2	Z-5-11129-003-0	C-3	Z-5-81221-063-0	J-8	Z-5-87813-206-0	C-2	Z-5-87813-227-0	F-3
Z-0-2868-1030-0	G-4	Z-0-5014-0800-0	C-12	Z-5-11129-006-0	C-3	Z-5-81222-077-0	J-8	Z-5-87813-206-0	C-5	Z-5-87813-227-0	F-5
Z-0-2868-1040-0	D-4	Z-0-5014-0816-0	F-6	Z-5-11129-006-0	D-2	Z-5-81229-029-0	J-8	Z-5-87813-206-0	C-5	Z-5-87813-227-0	G-2
Z-0-2878-1025-0	E-2	Z-0-5014-0825-0	C-12	Z-5-11219-008-0	C-3	Z-5-81229-165-0	J-8	Z-5-87813-207-0	C-2	Z-5-87813-227-0	H-2
Z-0-2878-1230-0	J-2	Z-0-5014-0825-0	F-2	Z-5-11219-015-0	C-3	Z-5-81229-166-0	J-8	Z-5-87813-207-0	C-2	Z-5-87813-227-0	H-4
Z-0-5004-0616-0	C-8	Z-0-5014-0830-0	F-3	Z-5-11219-017-0	C-3	Z-5-81229-182-0	J-8	Z-5-87813-207-0	C-5	Z-5-87813-227-0	H-6
Z-0-5004-0616-0	C-11	Z-1-09600-005-1	C-3	Z-5-11219-018-0	C-3	Z-5-81229-183-0	J-8	Z-5-87813-207-0	C-5	Z-5-87813-517-0	C-4

M-3 PARTS NUMBER INDEX

PART No.	LOCATION	PART No.	LOCATION	PART No.	LOCATION	PART No.	LOCATION	PART No.	LOCATION	PART No.	LOCATION
Z-5-87813-517-0	C-8	Z-8-94122-713-0	H-13	Z-8-94170-136-0	J-3	Z-8-94227-485-0	H-8	Z-8-94227-540-0	H-10	Z-8-94227-581-0	H-11
Z-5-87813-517-0	C-11	Z-8-94123-623-1	D-3	Z-8-94171-289-0	D-5	Z-8-94227-486-0	H-8	Z-8-94227-541-0	H-10	Z-8-94227-582-0	H-11
Z-5-87813-517-0	D-3	Z-8-94128-963-0	H-4	Z-8-94171-943-1	C-3	Z-8-94227-487-0	H-8	Z-8-94227-542-0	H-10	Z-8-94227-585-0	H-13
Z-5-87813-517-0	E-2	Z-8-94128-964-0	H-4	Z-8-94171-944-0	F-5	Z-8-94227-488-0	H-8	Z-8-94227-543-0	H-10	Z-8-94227-590-0	H-13
Z-5-87813-517-0	F-3	Z-8-94129-384-0	D-5	Z-8-94173-430-0	D-3	Z-8-94227-489-0	H-8	Z-8-94227-544-0	H-10	Z-8-94227-593-0	H-14
Z-5-87813-517-0	F-5	Z-8-94129-386-0	D-5	Z-8-94173-863-0	C-9	Z-8-94227-491-0	H-9	Z-8-94227-545-0	H-10	Z-8-94227-598-0	H-14
Z-5-87813-517-0	G-2	Z-8-94130-021-1	F-5	Z-8-94174-344-0	H-4	Z-8-94227-491-0	H-9	Z-8-94227-546-0	H-10	Z-8-94227-599-0	H-14
Z-5-87813-517-0	H-2	Z-8-94130-559-0	D-2	Z-8-94174-828-0	H-13	Z-8-94227-493-0	H-12	Z-8-94227-547-0	H-10	Z-8-94227-601-0	H-11
Z-5-87813-517-0	H-4	Z-8-94132-674-0	I-5	Z-8-94176-962-0	H-5	Z-8-94227-495-0	H-9	Z-8-94227-548-0	H-10	Z-8-94227-602-0	H-11
Z-5-87813-517-0	H-6	Z-8-94132-675-0	I-5	Z-8-94176-963-0	H-5	Z-8-94227-495-0	H-12	Z-8-94227-549-0	H-10	Z-8-94227-602-0	H-11
Z-5-87813-518-0	C-4	Z-8-94133-207-5	D-3	Z-8-94176-964-0	H-5	Z-8-94227-496-0	H-9	Z-8-94227-550-0	H-10	Z-8-94227-606-0	H-15
Z-5-87813-518-0	C-8	Z-8-94133-731-2	D-5	Z-8-94176-965-0	H-5	Z-8-94227-497-0	H-9	Z-8-94227-551-0	H-10	Z-8-94227-607-0	H-14
Z-5-87813-518-0	C-11	Z-8-94142-156-1	C-7	Z-8-94176-966-0	H-5	Z-8-94227-498-0	H-9	Z-8-94227-552-0	H-10	Z-8-94227-608-0	H-14
Z-5-87813-518-0	D-3	Z-8-94147-529-0	C-11	Z-8-94176-967-0	H-5	Z-8-94227-499-0	H-9	Z-8-94227-553-0	H-10	Z-8-94227-609-0	H-14
Z-5-87813-518-0	E-2	Z-8-94148-392-2	H-2	Z-8-94176-968-0	H-5	Z-8-94227-514-0	H-9	Z-8-94227-554-0	H-10	Z-8-94227-610-0	H-14
Z-5-87813-518-0	F-4	Z-8-94149-358-0	J-3	Z-8-94176-969-0	H-5	Z-8-94227-515-0	H-9	Z-8-94227-555-0	H-10	Z-8-94227-611-0	H-14
Z-5-87813-518-0	F-5	Z-8-94149-359-1	G-3	Z-8-94176-970-0	H-5	Z-8-94227-516-1	H-9	Z-8-94227-556-0	H-10	Z-8-94227-612-0	H-15
Z-5-87813-518-0	G-2	Z-8-94152-283-1	D-5	Z-8-94176-971-0	H-5	Z-8-94227-517-0	H-9	Z-8-94227-557-0	H-10	Z-8-94227-613-0	H-15
Z-5-87813-518-0	H-2	Z-8-94152-344-0	D-5	Z-8-94177-189-3	F-5	Z-8-94227-518-0	H-9	Z-8-94227-558-0	H-10	Z-8-94227-636-0	I-2
Z-5-87813-518-0	H-4	Z-8-94152-345-1	D-5	Z-8-94201-641-0	C-6	Z-8-94227-519-0	H-9	Z-8-94227-559-0	H-11	Z-8-94227-637-0	H-11
Z-5-87813-518-0	H-6	Z-8-94152-595-0	G-3	Z-8-94202-456-3	D-3	Z-8-94227-520-0	H-9	Z-8-94227-560-0	H-11	Z-8-94227-638-0	H-11
Z-8-09675-032-1	F-5	Z-8-94152-989-1	H-3	Z-8-94205-986-1	C-9	Z-8-94227-521-0	H-9	Z-8-94227-561-0	H-11	Z-8-94227-639-0	H-11
Z-8-94104-993-0	H-4	Z-8-94153-051-0	D-3	Z-8-94205-986-1	G-2	Z-8-94227-522-0	H-9	Z-8-94227-562-0	H-11	Z-8-94227-640-0	I-2
Z-8-94109-707-0	H-6	Z-8-94153-722-1	C-6	Z-8-94205-987-1	C-9	Z-8-94227-523-0	H-9	Z-8-94227-563-0	H-11	Z-8-94227-641-0	I-2
Z-8-94109-901-4	E-2	Z-8-94167-425-0	J-4	Z-8-94224-829-0	I-3	Z-8-94227-524-0	H-9	Z-8-94227-564-0	H-11	Z-8-94227-643-0	I-2
Z-8-94110-480-1	D-5	Z-8-94167-427-0	J-4	Z-8-94225-562-0	H-3	Z-8-94227-525-0	H-10	Z-8-94227-565-0	H-11	Z-8-94227-644-0	I-2
Z-8-94110-560-0	G-2	Z-8-94167-428-0	J-4	Z-8-94225-562-0	H-3	Z-8-94227-525-0	H-10	Z-8-94227-566-0	H-11	Z-8-94227-647-0	H-12
Z-8-94111-615-0	G-2	Z-8-94167-430-0	J-4	Z-8-94226-554-0	I-3	Z-8-94227-527-0	H-10	Z-8-94227-567-0	H-11	Z-8-94227-648-0	I-2
Z-8-94111-658-0	H-11	Z-8-94167-433-0	J-4	Z-8-94226-565-0	I-2	Z-8-94227-528-0	H-10	Z-8-94227-568-0	H-11	Z-8-94227-660-0	I-3
Z-8-94111-659-0	H-11	Z-8-94167-434-0	J-4	Z-8-94227-475-0	H-13	Z-8-94227-529-0	H-10	Z-8-94227-569-0	H-11	Z-8-94227-662-0	I-3
Z-8-94111-660-0	H-11	Z-8-94167-435-0	J-4	Z-8-94227-475-0	H-13	Z-8-94227-530-0	H-10	Z-8-94227-570-0	H-11	Z-8-94227-671-0	I-3
Z-8-94111-661-0	H-11	Z-8-94167-882-0	F-3	Z-8-94227-477-0	H-8	Z-8-94227-531-0	H-10	Z-8-94227-571-0	H-11	Z-8-94228-404-0	H-12
Z-8-94111-662-0	H-11	Z-8-94167-883-0	F-3	Z-8-94227-478-0	H-8	Z-8-94227-532-0	H-10	Z-8-94227-572-0	H-11	Z-8-94228-545-0	H-8
Z-8-94111-663-0	H-11	Z-8-94167-884-0	F-3	Z-8-94227-479-0	H-8	Z-8-94227-533-0	H-10	Z-8-94227-573-0	H-11	Z-8-94228-545-0	H-14
Z-8-94111-664-0	H-11	Z-8-94167-885-0	F-3	Z-8-94227-480-0	H-8	Z-8-94227-534-0	H-10	Z-8-94227-574-0	H-11	Z-8-94229-157-0	H-8
Z-8-94111-665-0	H-11	Z-8-94167-886-0	F-3	Z-8-94227-481-0	H-8	Z-8-94227-535-0	H-10	Z-8-94227-575-0	H-11	Z-8-94231-123-0	H-14
Z-8-94111-671-0	I-2	Z-8-94169-528-0	H-8	Z-8-94227-482-1	H-8	Z-8-94227-536-0	H-10	Z-8-94227-576-0	H-11	Z-8-94231-124-0	H-14
Z-8-94114-727-0	G-2	Z-8-94170-127-0	G-2	Z-8-94227-483-0	H-8	Z-8-94227-537-0	H-10	Z-8-94227-577-0	H-11	Z-8-94231-125-0	H-14
Z-8-94121-113-1	D-3	Z-8-94170-128-0	G-2	Z-8-94227-484-0	H-8	Z-8-94227-538-0	H-10	Z-8-94227-578-0	H-11	Z-8-94231-126-0	H-14
Z-8-94121-620-0	H-9	Z-8-94170-136-0	J-3	Z-8-94227-485-0	H-8	Z-8-94227-539-0	H-10	Z-8-94227-580-0	H-11	Z-8-94235-369-0	C-4

M-4 PARTS NUMBER INDEX

PART No.	LOCATION	PART No.	LOCATION	PART No.	LOCATION	PART No.	LOCATION	PART No.	LOCATION	PART No.	LOCATION
Z-8-94238-610-0	H-2	Z-8-94317-507-0	H-13	Z-8-94368-249-2	H-2	Z-8-94408-526-0	H-15	Z-8-94433-216-0	H-13	Z-8-97020-571-0	C-9
Z-8-94238-610-0	H-3	Z-8-94317-508-0	H-13	Z-8-94368-252-0	J-2	Z-8-94408-527-0	H-15	Z-8-94433-217-0	H-13	Z-8-97021-690-0	E-2
Z-8-94239-373-0	H-12	Z-8-94317-509-0	H-14	Z-8-94369-299-3	I-5	Z-8-94408-528-0	H-16	Z-8-94433-222-0	H-15	Z-8-97023-182-1	C-6
Z-8-94242-275-0	H-12	Z-8-94317-513-0	I-2	Z-8-94370-942-1	H-3	Z-8-94408-542-0	I-3	Z-8-94433-302-0	D-5	Z-8-97024-244-0	I-2
Z-8-94242-284-0	I-3	Z-8-94324-159-0	C-6	Z-8-94380-656-0	H-9	Z-8-94410-344-0	J-7	Z-8-94433-304-0	D-5	Z-8-97028-567-1	H-9
Z-8-94242-967-0	H-9	Z-8-94327-564-1	F-5	Z-8-94380-656-0	H-9	Z-8-94410-345-0	J-6	Z-8-94433-760-0	H-8	Z-8-97028-567-1	H-9
Z-8-94247-716-0	H-11	Z-8-94328-440-0	C-10	Z-8-94382-546-0	G-3	Z-8-94413-822-0	F-6	Z-8-94433-765-0	H-12	Z-8-97028-590-0	G-2
Z-8-94247-722-0	I-3	Z-8-94328-442-0	C-9	Z-8-94385-562-0	C-4	Z-8-94413-822-0	G-3	Z-8-94433-765-0	H-12	Z-8-97028-597-0	G-2
Z-8-94247-903-1	D-3	Z-8-94328-443-1	C-9	Z-8-94386-591-0	H-9	Z-8-94416-370-1	H-2	Z-8-94434-827-1	F-5	Z-8-97035-883-0	E-2
Z-8-94248-002-0	H-15	Z-8-94328-445-0	C-9	Z-8-94386-593-0	H-13	Z-8-94418-036-0	I-3	Z-8-94438-305-0	D-5	Z-8-97036-197-0	D-5
Z-8-94248-161-0	J-2	Z-8-94328-447-0	C-6	Z-8-94389-232-0	J-6	Z-8-94420-247-0	H-2	Z-8-94440-010-0	G-4	Z-8-97036-956-0	G-3
Z-8-94250-172-0	D-3	Z-8-94328-448-0	D-5	Z-8-94389-233-0	J-6	Z-8-94422-326-0	G-2	Z-8-94442-162-1	F-6	Z-8-97036-956-0	G-3
Z-8-94250-514-0	C-3	Z-8-94328-503-2	C-6	Z-8-94389-234-0	J-6	Z-8-94423-756-0	J-2	Z-8-94445-579-0	H-8	Z-8-97041-670-0	H-9
Z-8-94250-615-1	D-3	Z-8-94328-832-0	G-3	Z-8-94389-235-0	J-6	Z-8-94423-756-0	J-8	Z-8-94450-142-0	I-5	Z-8-97042-262-1	C-5
Z-8-94252-536-1	D-5	Z-8-94328-834-0	C-9	Z-8-94389-236-0	J-6	Z-8-94424-217-0	H-4	Z-8-94450-772-0	F-3	Z-8-97042-997-2	J-2
Z-8-94257-593-0	H-2	Z-8-94329-622-0	F-3	Z-8-94389-237-0	J-6	Z-8-94424-373-0	J-7	Z-8-94453-344-0	C-4	Z-8-97042-997-2	J-2
Z-8-94257-670-0	H-11	Z-8-94329-691-0	I-3	Z-8-94389-238-0	J-6	Z-8-94426-047-1	H-13	Z-8-94455-667-0	D-3	Z-8-97042-997-2	J-4
Z-8-94313-200-0	H-9	Z-8-94332-786-0	F-6	Z-8-94389-239-0	J-6	Z-8-94426-047-1	H-13	Z-8-94456-794-2	C-3	Z-8-97042-997-2	J-4
Z-8-94313-267-0	H-13	Z-8-94334-739-0	C-11	Z-8-94389-240-0	J-7	Z-8-94426-049-0	H-13	Z-8-94457-008-1	C-6	Z-8-97043-280-0	C-2
Z-8-94313-276-0	H-9	Z-8-94337-863-0	J-3	Z-8-94389-241-0	J-6	Z-8-94426-049-0	H-13	Z-8-94457-158-0	C-6	Z-8-97043-741-1	F-5
Z-8-94313-276-0	H-9	Z-8-94338-096-0	J-2	Z-8-94389-242-0	J-6	Z-8-94426-049-0	H-13	Z-8-94460-687-0	C-6	Z-8-97043-744-1	J-2
Z-8-94316-262-0	I-3	Z-8-94338-096-0	J-6	Z-8-94389-243-0	J-6	Z-8-94427-201-2	C-4	Z-8-94462-137-1	F-3	Z-8-97044-112-0	F-2
Z-8-94316-262-0	I-3	Z-8-94338-193-0	J-3	Z-8-94389-244-0	J-6	Z-8-94427-206-2	C-3	Z-8-94462-850-0	J-6	Z-8-97045-322-0	C-11
Z-8-94316-263-0	I-3	Z-8-94340-696-1	F-3	Z-8-94389-245-0	J-6	Z-8-94427-456-0	C-7	Z-8-94468-517-0	C-11	Z-8-97045-362-1	C-8
Z-8-94316-264-0	I-3	Z-8-94341-874-0	C-11	Z-8-94389-246-0	J-6	Z-8-94428-798-3	F-2	Z-8-94470-553-0	G-3	Z-8-97047-202-0	H-13
Z-8-94316-265-0	I-3	Z-8-94341-905-0	D-5	Z-8-94401-679-0	F-3	Z-8-94428-868-0	H-16	Z-8-94470-582-0	H-12	Z-8-97049-708-0	F-3
Z-8-94316-266-0	I-3	Z-8-94341-906-0	D-5	Z-8-94402-498-0	J-3	Z-8-94428-869-0	H-16	Z-8-94473-120-0	H-9	Z-8-97062-086-0	C-6
Z-8-94316-274-0	H-14	Z-8-94342-385-1	C-11	Z-8-94402-500-0	J-3	Z-8-94428-870-0	H-16	Z-8-94473-128-0	H-11	Z-8-97062-241-0	I-2
Z-8-94316-274-0	H-14	Z-8-94360-427-1	F-3	Z-8-94404-791-0	J-2	Z-8-94428-871-0	H-16	Z-8-94473-129-0	H-15	Z-8-97062-300-0	C-6
Z-8-94316-275-0	H-14	Z-8-94360-428-0	F-3	Z-8-94407-616-2	E-2	Z-8-94428-872-0	H-16	Z-8-94473-135-0	H-12	Z-8-97063-258-0	C-5
Z-8-94316-275-0	H-14	Z-8-94360-429-1	F-3	Z-8-94407-616-2	E-2	Z-8-94428-873-0	H-16	Z-8-94476-696-0	D-3	Z-8-97063-259-0	C-5
Z-8-94316-276-0	H-14	Z-8-94362-879-0	F-6	Z-8-94408-206-0	D-3	Z-8-94428-874-0	H-16	Z-8-94482-217-0	H-4	Z-8-97063-260-0	C-5
Z-8-94316-276-0	H-14	Z-8-94365-381-0	G-3	Z-8-94408-517-0	H-15	Z-8-94428-875-0	H-16	Z-8-94483-894-0	G-3	Z-8-97063-366-0	C-9
Z-8-94316-277-0	H-14	Z-8-94365-674-1	G-3	Z-8-94408-519-0	H-15	Z-8-94432-642-0	C-3	Z-8-97015-515-1	C-12	Z-8-97063-400-3	G-4
Z-8-94316-277-0	H-14	Z-8-94366-848-0	G-4	Z-8-94408-520-0	H-15	Z-8-94433-204-0	H-9	Z-8-97016-100-0	E-2	Z-8-97065-970-0	D-5
Z-8-94317-501-0	H-13	Z-8-94367-292-2	I-5	Z-8-94408-521-0	H-15	Z-8-94433-205-0	H-9	Z-8-97016-101-0	E-2	Z-8-97065-983-0	F-4
Z-8-94317-502-0	H-13	Z-8-94367-293-3	I-5	Z-8-94408-522-0	H-15	Z-8-94433-206-0	H-9	Z-8-97016-473-0	C-3	Z-8-97066-197-0	D-3
Z-8-94317-504-0	H-13	Z-8-94367-294-0	I-5	Z-8-94408-523-0	H-15	Z-8-94433-207-0	H-9	Z-8-97018-664-0	G-3	Z-8-97066-741-1	E-2
Z-8-94317-505-0	H-13	Z-8-94367-956-0	I-5	Z-8-94408-524-0	H-15	Z-8-94433-208-0	H-10	Z-8-97020-328-0	C-4	Z-8-97069-786-1	G-3
Z-8-94317-506-0	H-13	Z-8-94367-957-0	I-5	Z-8-94408-525-0	H-15	Z-8-94433-209-0	H-10	Z-8-97020-570-0	D-5	Z-8-97071-673-0	D-5

M-5 PARTS NUMBER INDEX

PART No.	LOCATION	PART No.	LOCATION	PART No.	LOCATION	PART No.	LOCATION	PART No.	LOCATION	PART No.	LOCATION
Z-8-97073-684-0	D-5	Z-8-97107-739-0	D-4	Z-8-97120-278-2	D-2	Z-8-97144-359-0	H-16	Z-8-97176-616-0	C-5	Z-9-00097-011-0	F-3
Z-8-97074-728-1	C-11	Z-8-97107-896-1	J-2	Z-8-97120-307-0	D-3	Z-8-97144-360-0	H-16	Z-8-97176-616-0	C-6	Z-9-0106-5865-0	D-5
Z-8-97079-653-0	H-2	Z-8-97107-896-1	J-2	Z-8-97120-931-0	C-11	Z-8-97144-361-0	H-16	Z-8-97176-617-0	C-6	Z-9-0190-0825-0	F-2
Z-8-97079-653-0	H-4	Z-8-97107-896-1	J-4	Z-8-97122-063-0	I-2	Z-8-97144-362-0	H-16	Z-8-97176-617-0	C-6	Z-9-0191-0618-0	I-3
Z-8-97080-214-1	D-5	Z-8-97107-896-1	J-4	Z-8-97122-063-0	I-2	Z-8-97144-363-0	I-1	Z-8-97176-618-0	C-6	Z-9-0206-1025-0	C-4
Z-8-97080-215-0	C-6	Z-8-97107-954-2	C-6	Z-8-97123-050-0	H-3	Z-8-97144-364-0	I-1	Z-8-97176-619-0	C-6	Z-9-0206-1040-0	C-4
Z-8-97080-948-0	G-4	Z-8-97107-954-2	C-7	Z-8-97123-295-0	F-6	Z-8-97144-365-0	I-1	Z-8-97176-699-0	C-2	Z-9-0306-5816-0	G-2
Z-8-97081-742-1	D-3	Z-8-97107-956-1	C-9	Z-8-97123-310-0	H-3	Z-8-97144-366-0	I-1	Z-8-97176-700-0	C-2	Z-9-0391-0408-0	D-3
Z-8-97083-162-0	D-2	Z-8-97107-957-1	H-3	Z-8-97123-785-0	C-10	Z-8-97144-367-0	I-1	Z-8-97176-701-0	C-3	Z-9-0411-0616-0	C-9
Z-8-97083-193-0	J-4	Z-8-97107-958-1	E-2	Z-8-97123-795-0	H-3	Z-8-97144-368-0	I-1	Z-8-97176-702-0	C-3	Z-9-0411-0820-0	C-9
Z-8-97083-194-0	J-4	Z-8-97108-047-0	I-3	Z-8-97123-885-0	H-3	Z-8-97144-369-0	I-1	Z-8-97176-703-0	C-3	Z-9-0411-0825-0	D-3
Z-8-97083-195-0	J-4	Z-8-97108-075-0	C-4	Z-8-97123-886-0	H-3	Z-8-97144-370-0	I-1	Z-8-97176-704-0	C-3	Z-9-0411-0825-0	D-3
Z-8-97083-196-0	J-5	Z-8-97108-076-2	C-13	Z-8-97124-473-0	H-15	Z-8-97144-371-0	I-1	Z-8-97178-259-0	J-5	Z-9-0411-0825-0	E-3
Z-8-97083-358-0	H-4	Z-8-97108-076-2	C-13	Z-8-97124-479-0	H-14	Z-8-97144-372-0	I-1	Z-8-97178-289-1	J-2	Z-9-0411-0835-0	D-3
Z-8-97086-142-0	H-4	Z-8-97109-092-0	J-4	Z-8-97124-480-0	H-14	Z-8-97144-373-0	I-1	Z-8-97178-289-1	J-4	Z-9-0411-0840-0	G-3
Z-8-97089-278-0	D-2	Z-8-97109-093-0	J-4	Z-8-97124-481-0	H-14	Z-8-97144-374-0	I-1	Z-8-97179-918-0	C-7	Z-9-0441-1025-0	C-9
Z-8-97089-278-0	D-2	Z-8-97109-171-0	C-9	Z-8-97125-290-0	H-6	Z-8-97144-375-0	I-1	Z-8-97180-686-0	C-9	Z-9-0582-0845-0	C-10
Z-8-97089-280-0	D-2	Z-8-97109-178-0	C-9	Z-8-97125-290-0	H-8	Z-8-97144-376-0	I-1	Z-8-97180-687-0	C-8	Z-9-0800-0718-0	D-5
Z-8-97089-280-1	D-2	Z-8-97109-216-1	E-3	Z-8-97125-290-0	H-8	Z-8-97144-377-0	I-1	Z-8-97180-688-0	C-8	Z-9-0803-0743-0	C-6
Z-8-97089-280-1	D-2	Z-8-97109-380-0	J-2	Z-8-97126-492-0	F-3	Z-8-97144-378-0	I-1	Z-8-97182-224-0	G-4	Z-9-0815-0616-0	C-7
Z-8-97089-798-0	C-11	Z-8-97109-920-0	H-3	Z-8-97128-397-1	C-6	Z-8-97144-379-0	I-1	Z-8-97182-407-0	G-4	Z-9-0815-1050-0	C-4
Z-8-97089-845-0	D-5	Z-8-97113-336-1	F-5	Z-8-97129-412-0	H-3	Z-8-97144-380-0	I-1	Z-8-97182-472-0	G-4	Z-9-0815-1228-0	C-13
Z-8-97089-866-1	C-8	Z-8-97113-337-0	F-6	Z-8-97129-413-0	H-2	Z-8-97144-381-0	I-1	Z-8-97186-535-0	C-9	Z-9-0816-0508-0	C-6
Z-8-97089-867-1	C-8	Z-8-97113-800-0	C-4	Z-8-97131-729-0	D-5	Z-8-97144-382-0	I-1	Z-8-97190-367-0	H-6	Z-9-0816-1022-0	C-4
Z-8-97089-881-0	C-8	Z-8-97114-224-1	D-3	Z-8-97136-413-0	H-14	Z-8-97144-383-0	I-2	Z-8-97190-367-0	H-8	Z-9-0911-0406-0	C-9
Z-8-97089-932-0	D-5	Z-8-97114-225-0	H-3	Z-8-97136-680-0	H-6	Z-8-97144-384-0	I-2	Z-8-97190-930-0	C-6	Z-9-0911-0406-0	H-13
Z-8-97090-633-0	H-6	Z-8-97115-129-0	D-5	Z-8-97136-680-0	H-6	Z-8-97144-385-0	I-2	Z-8-97208-010-0	C-11	Z-9-0911-0406-0	H-13
Z-8-97090-633-0	H-8	Z-8-97115-131-0	D-5	Z-8-97136-680-0	H-8	Z-8-97144-386-0	I-2	Z-8-97209-609-0	D-2	Z-9-0911-0406-0	H-13
Z-8-97090-879-0	G-3	Z-8-97115-640-0	F-6	Z-8-97136-680-0	H-8	Z-8-97144-387-0	I-2	Z-8-97209-609-0	D-2	Z-9-0911-0406-0	H-13
Z-8-97094-690-2	H-2	Z-8-97117-242-0	C-8	Z-8-97139-710-0	H-2	Z-8-97144-388-0	I-2	Z-8-97212-540-0	E-2	Z-9-0911-0408-0	C-9
Z-8-97094-692-2	H-2	Z-8-97118-698-0	C-8	Z-8-97139-711-0	H-2	Z-8-97144-389-0	I-2	Z-8-97213-796-0	H-3	Z-9-0911-0408-0	E-3
Z-8-97094-693-2	H-2	Z-8-97118-768-0	D-3	Z-8-97139-713-0	F-5	Z-8-97144-390-0	I-2	Z-8-97214-365-0	H-10	Z-9-0911-0408-0	G-3
Z-8-97095-512-0	G-2	Z-8-97119-184-0	I-2	Z-8-97140-624-0	H-2	Z-8-97144-391-0	I-2	Z-8-97214-477-0	H-13	Z-9-0911-0408-0	J-3
Z-8-97101-078-0	I-3	Z-8-97119-187-0	I-2	Z-8-97140-624-0	H-4	Z-8-97145-612-0	F-5	Z-8-97214-482-0	H-14	Z-9-0911-0410-0	C-4
Z-8-97101-502-1	D-5	Z-8-97119-187-0	I-3	Z-8-97141-285-0	C-9	Z-8-97147-034-0	H-13	Z-8-97214-483-0	I-4	Z-9-0911-0410-0	C-9
Z-8-97101-873-2	H-2	Z-8-97119-344-0	I-3	Z-8-97141-769-0	H-4	Z-8-97161-131-0	D-3	Z-8-97214-484-0	I-3	Z-9-0911-0506-0	C-9
Z-8-97102-536-0	H-10	Z-8-97119-345-0	H-9	Z-8-97144-355-0	H-15	Z-8-97162-704-0	J-4	Z-8-97214-485-0	I-3	Z-9-0911-0508-0	E-2
Z-8-97105-790-0	J-2	Z-8-97119-346-0	H-14	Z-8-97144-356-0	H-15	Z-8-97162-705-0	J-5	Z-8-97214-487-0	I-3	Z-9-0911-0508-0	F-6
Z-8-97107-444-0	H-4	Z-8-97119-346-0	H-14	Z-8-97144-357-0	H-16	Z-8-97168-073-1	C-6	Z-8-97214-488-0	I-3	Z-9-0911-0508-0	G-3
Z-8-97107-547-0	H-4	Z-8-97119-349-0	I-3	Z-8-97144-358-0	H-16	Z-8-97174-558-0	D-5	Z-9-00090-181-0	J-8	Z-9-0911-0508-0	J-5

M-6 PARTS NUMBER INDEX

PART No.	LOCATION	PART No.	LOCATION	PART No.	LOCATION	PART No.	LOCATION	PART No.	LOCATION	PART No.	LOCATION
Z-9-0911-1508-0	D-5	Z-9-09801-202-1	J-3								
Z-9-0911-1510-0	C-4	Z-9-09801-216-0	C-12								
Z-9-0915-0506-0	C-9	Z-9-09814-014-1	G-2								
Z-9-0915-0506-0	H-13	Z-9-09878-597-0	C-11								
Z-9-0915-0508-0	C-9	Z-9-09902-238-0	J-2								
Z-9-0915-0508-0	C-12	Z-9-09915-642-2	G-4								
Z-9-0915-0508-0	E-2	Z-9-11219-215-0	C-11								
Z-9-0915-0508-0	E-3	Z-9-12333-605-1	C-7								
Z-9-0915-0508-0	G-2	Z-9-12626-005-0	D-5								
Z-9-0915-0508-0	G-3	Z-9-13113-077-1	F-2								
Z-9-0915-0508-0	G-3	Z-9-13140-120-0	F-2								
Z-9-0915-0508-0	J-3	Z-9-13143-010-0	F-2								
Z-9-0915-0508-0	J-5	Z-9-13639-001-0	G-2								
Z-9-0915-0510-0	C-4	Z-9-13642-076-1	G-3								
Z-9-0915-0510-0	C-9	Z-9-13642-078-0	G-3								
Z-9-0915-0512-0	C-9	Z-9-8223-5015-0	J-8								
Z-9-0915-0808-0	D-6	Z-9-89136-423-0	G-3								
Z-9-0916-0506-0	I-3	Z-9-9920-2314-0	C-4								
Z-9-0916-0508-0	C-12	Z-9-9920-2320-0	C-11								
Z-9-0916-0508-0	J-3										
Z-9-0916-4010-0	D-5										
Z-9-0916-4608-0	D-6										
Z-9-0916-4708-0	F-5										
Z-9-0916-4708-0	J-3										
Z-9-0916-4808-0	H-3										
Z-9-0918-0019-0	D-5										
Z-9-0918-0030-0	C-9										
Z-9-0920-4521-0	C-12										
Z-9-0956-1218-0	F-6										
Z-9-0956-1353-0	I-3										
Z-9-0957-1316-0	G-3										
Z-9-0957-1408-0	F-6										
Z-9-0957-1414-0	C-4										
Z-9-0957-2008-0	F-5										
Z-9-09630-034-1	D-3										
Z-9-09661-005-0	G-3										
Z-9-09664-001-0	C-3										
Z-9-09800-997-1	J-3										
Z-9-09801-034-1	J-3										
Z-9-09801-079-1	J-3										

4JG2PJ, 4JG2PJ-01, 4JG2PJ-02, 4JG2PJ-03, 4JG2PJ-04, 4JG2PJ-05, 4JG2PJ-07, 4JG2PJ-08, 4JG2PJ-09

Microfiche (Film type)		Parts Manual (Book type)	
Issued	Order No.	Book No.	Issued
Aug., 1994	MFE-4JG2A	PE-4JG2A	Aug., 1994
Aug., 1995	MFE-4JG2B	PE-4JG2B	Aug., 1995
Feb., 1997	MFE-4JG2C	PE-4JG2C	Feb., 1997
		PE-4JG2D	Jun., 1999
		PE-4JG2E	Jul., 2000

TCM株式会社
本　社　　大阪市西区京町堀１－１５－１０
発　行　　ＴＣＭテクノ株式会社

TCM CORPORATION
INTERNATIONAL MARKETING DIVISION: 1-15-5, Nishi-shimbashi, Minato-ku, Tokyo 105-0003, Japan
FAX: Japan +81-3-35918152, 3-35918153

無断で転載・複製を禁ず
All rights reserved.

I-1207003(H) Printed in Japan

TCM株式会社